CHINOOK CK30.2

SOLID FUEL CATALYTIC STOVE

OPERATION & INSTALLATION MANUAL

We recommend that our woodburning hearth products be installed and serviced by professionals who are certified in the U.S. by the National Fireplace Institute® (NFI) as NFI Woodburning Specialists or who are certified in Canada by Wood Energy Technical Training (WETT).

U.S. EPA CERTIFIED TO COMPLY WITH 2020 PARTICULATE EMISSION STANDARDS USING CRIB WOOD

0142WS021E
0142WS014S

Installer: Please COMPLETE THE DETAILS ON THE LAST PAGE and leave this manual with the homeowner.
Homeowner: Please SAVE THESE INSTRUCTIONS for future reference.

MANUFACTURED BY
Valley Comfort Systems Inc., 1290 Commercial Way, Penticton BC, Canada, V2A 3H5
web: www.blazeking.com email: info@blazeking.com

ATTENTION: The authority having jurisdiction (municipal building department, fire department, etc.) should be consulted before installation to determine the need to obtain a permit.

Pour la version française de nos manuels S.V.P. vous référez à notre site web: www.blazeking.com

180-CK30.2 v3.01 FEB 14, 2025

TABLE OF CONTENTS

CERTIFICATION LABEL 4
PREFACE 5
EPA CERTIFICATION TEST DATA 5
SPECIFICATIONS 6
PARTS INCLUDED 6
OPTIONAL ACCESSORIES 6
APPLIANCE DIMENSIONS 7
SAFETY CLEARANCES 8
MINIMUM CLEARANCES 8
FLOOR PROTECTION 8
CHIMNEY CONNECTIONS 9
COMBUSTION AIR 9
DRAFT PERFORMANCE 9
ROLE OF THE CHIMNEY 9
VENTING SYSTEM 10
CONNECTION TO A METAL PREFABRICATED CHIMNEY 10
CONNECTION TO A MASONRY CHIMNEY 11
RECOMMENDED CHIMNEY HEIGHTS 12
INSTALLATION INSTRUCTIONS 13
ALCOVES AND FIREPLACES 13
ELECTRICAL CONNECTION 13
MOBILE HOME or TRANSPORTABLE BUILDING INSTALLATION 13
OPTIONAL ACCESSORIES 14
SIDE SHIELD REMOVAL 14
DOOR REMOVAL 15
OPERATING INSTRUCTIONS 16
YOUR FIRST FIRE! 16
INTRODUCTION 16
EFFICIENCY 16
FAN OPERATION 16
SELECTING WOOD 17
HOW TO USE MOISTURE METERS 17
FIRE POKER 17
BYPASS DOOR 18
CATALYTIC THERMOMETER 18
THERMOSTAT 18
USABLE FIREBOX LOADING AREA 19
LIGHTING THE FIRE 20
RELOADING PROCEDURE 21
OPTIMAL LOW BURN THERMOSTAT SETTING 22
WOOD BURNING IN THE SHOULDER SEASON 22
ICE - FORMATION AND PREVENTION 22

TABLE OF CONTENTS

CATALYTIC COMBUSTOR 23
COMBUSTOR MONITORING 23
COMBUSTOR TESTING 23
COMBUSTOR CLEANING 24
COMBUSTOR REPLACEMENT 24
COMBUSTOR WARRANTY 26
COMBUSTOR TROUBLESHOOTING 27
MAINTENANCE 29
RECOMMENDED MAINTENANCE 29
CATALYTIC THERMOMETER MAINTENANCE 29
THERMOSTAT or THERMOMETER MAINTENANCE 29
OPTIONAL FAN ASSEMBLY MAINTENANCE 29
ASH REMOVAL 29
LOADING DOOR TENSION ADJUSTMENT 30
LOADING DOOR GASKET INSPECTION 30
LOADING DOOR GASKET REPLACEMENT 30
DOOR GASKET PAPER TEST 31
DOOR GLASS GASKET INSPECTION 31
DOOR GLASS GASKET REPLACEMENT 31
DOOR GLASS CLEANING 32
BYPASS DOOR GASKET INSPECTION 32
BYPASS DOOR GASKET REPLACEMENT 32
VENTING SYSTEM MAINTENANCE 33
CREOSOTE FORMATION AND REMOVAL 33
RUN-AWAY OR CHIMNEY FIRE 33
TROUBLESHOOTING 34
REPLACEMENT PARTS 37
WARRANTY 40
INSTALLER NOTES 44

CERTIFICATION LABEL

For reference only - please refer to label on the appliance

0142WS021E
0142WS014S

CHINOOK CK30.2

SN - 54.

BLAZE KING CATALYTIC STOVE - POÊLE À BOIS CATALYTIQUE

MODEL / MODÈLE: CK30.2
ROOM HEATER, SOLID FUEL TYPE / APPAREIL DE CHAUFFAGE, TYPE COMBUSTIBLE SOLIDE
TESTED TO / TESTÉ: UL 1482-11(R2022) & CAN/ULC-S627:2023
CERTIFIED FOR USE IN BOTH USA AND CANADA / CERTIFIÉ POUR UNE UTILISATION AUX ÉTATS-UNIS ET AU CANADA
APPROVED FOR USE IN MOBILE HOMES (USA) AND IN TRANSPORTABLE BUILDINGS (CAN) / APPROUVÉ POUR UNE UTILISATION DANS LES MAISONS MOBILES (USA) ET DANS LES BÂTIMENTS TRANSPORTABLES (CAN)

Install and use this appliance in accordance with Blaze King's installation and operation instructions. Contact local building or fire officials about restrictions and installation inspection in your area. To be installed as a freestanding space heater with the clearances listed below and in the installation instructions. Not to be installed in any fireplace. DO NOT CONNECT THIS APPLIANCE TO A CHIMNEY FLUE SERVING ANOTHER APPLIANCE. The flue diameter is 6". Except for the installation detailed below, use a 6" listed, factory built chimney suitable for use with solid fuels conforming to UL-103HT (USA) or CAN/ULC-S629 (CAN) or a code compliant, masonry chimney.
Mobile Home (USA) or Transportable Building (CAN) and residential close clearance installations require a 6" listed double wall, close clearance chimney connector with matching listed factory built chimney suitable for use with solid fuels and conforming to UL-103HT (USA) or CAN/ULC-S629 (CAN). Mobile Home (USA) or Transportable Buildings (CAN) installations are approved for roof exit only. Do not install in a sleeping room. Connection through a wall or ceiling requires special methods, see instructions and refer to local building codes to ensure proper installation.

Installez et utilisez cet appareil conformément aux instructions d'installation et d'utilisation de Blaze King. Contactez les responsables locaux du bâtiment ou des pompiers au sujet des restrictions et de l'inspection de l'installation dans votre région. À installer en tant qu'appareil de chauffage autonome avec les dégagements indiqués ci-dessous et dans les instructions d'installation. Ne pas installer dans une cheminée. NE RACCORDEZ PAS CET APPAREIL À UN CONDUIT DE CHEMINÉE DESSERVANT UN AUTRE APPAREIL. Le diamètre du conduit est de 6". À l'exception de l'installation détaillée ci-dessous, utilisez une cheminée de 6" homologuée et fabriquée en usine adaptée à une utilisation avec des combustibles solides conformes à UL-103HT (USA) ou CAN/ULC-S629 (CAN) ou un code conforme, cheminée en maçonnerie.
Les installations de maisons mobiles (USA) ou de bâtiments transportables (CAN) et résidentielles à dégagement réduit nécessitent un connecteur de cheminée homologué à double paroi et à dégagement réduit avec une cheminée fabriquée en usine homologuée adaptée à une utilisation avec des combustibles solides et conforme à UL-103HT (USA) ou CAN/ULC-S629 (CAN). Les installations de maisons mobiles (USA) ou de bâtiments transportables (CAN) sont approuvées pour une sortie sur le toit uniquement. Ne pas installer dans une chambre à coucher. La connexion à travers un mur ou un plafond nécessite des méthodes spéciales, voir les instructions et se référer aux codes du bâtiment locaux pour assurer une installation correcte.

MINIMUM CLEARANCES TO COMBUSTIBLES (see owners manual for complete description of all requirements)
* In Canada, 18" clearances from single wall pipe is required. Check with local codes and pipe manufacturers for minimum pipe clearances.
DÉGAGEMENTS MINIMUM AUX COMBUSTIBLES (voir les directives d'installation pour la description complète de toutes les conditions)
* Au Canada, un dégagement de 18 po est exigé pour un tuyau à simple paroi. Vérifier avec le code du bâtiment local et avec le manufacturier de tuyaux pour les dégagements.

Residential Installations / Installations Résidentielles	A	B	* C	* D	E	* F	J
Roof Exit or Wall Exit, Parallel or Corner minimum clearances Dégagements minimaux de sortie de toit ou de sortie murale, parallèle ou d'angle	9.5" 241 mm	6" 153 mm	24.125" 603 mm	16.375" 416 mm	4" 102 mm	17.625" 448 mm	37" 940 mm
Mobile Home (USA) or Transportable Building (CAN) / Maison mobile (USA) or Bâtiment transportable (CAN)							
Roof Exit, Parallel or Corner minimum clearances; outside Air Kit and Fan Kit or Rear Shield required Dégagements minimaux de sortie de toit, parallèles ou en coin; Kit d'air extérieur et kit de ventilateur ou écran arrière requis	9.5" 241 mm	6" 153 mm	24.125" 603 mm	16.375" 416 mm	4" 102 mm	17.625" 448 mm	37" 940 mm

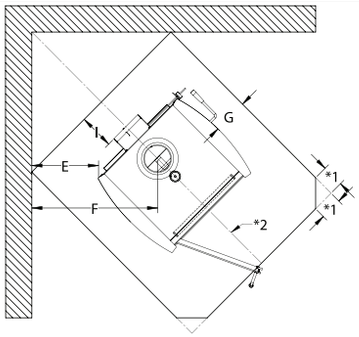

*1= 5.625" in Canada and 2.125" in USA
*2 = 58.625" in Canada and 56.625" in USA

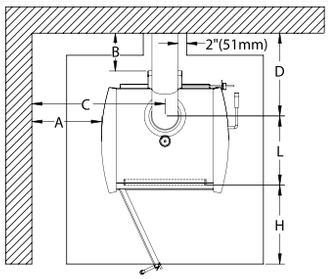

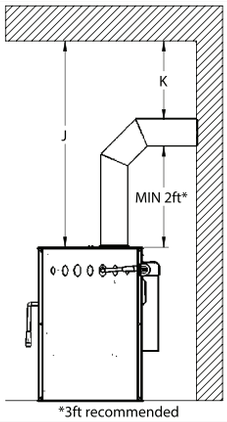

*3ft recommended

G = 3" (77 mm) in USA 8" (203 mm) in Canada	H = 16" (406 mm) in USA 18" (457 mm) in Canada	I = 0" (0 mm) in USA 8" (203 mm) in Canada	* K = 18" (457 mm) for single wall pipe in Canada	L = 15.75" (400mm)

This appliance does not require thermal hearth pad floor protection; however, if installed on a combustible floor, a non-combustible floor shield must be used. Minimum floor protection size is: 35" x 42.125" (889 mm x 1070 mm) in USA or 45.25" x 52.125" (1150 mm x 1324 mm) in Canada.
U.S. ENVIRONMENTAL PROTECTION AGENCY - Certified to comply with 2020 particulate emission standards using crib wood (certified to EPA test method 28R with an emission-rate of 0.81 g/hr). It is against federal regulations to operate this appliance in a manner inconsistent with operating instructions in the owner's manual or if the catalytic combustor is deactivated or removed. This appliance needs periodic inspection and repair for proper operation; consult the owner's manual for instruction.
ONLY OPERATE WITH DOOR CLOSED; open door to feed fire ONLY. DO NOT OBSTRUCT COMBUSTION AIR OPENINGS OR THE SPACE BENEATH THE APPLIANCE. Provide adequate outside air for combustion. For use with solid wood fuel only; do not burn other fuels as this will cause the catalyst in the combustor to become inactive. The performance of the combustor or its durability has not been evaluated as part of the certification. Combustor OEM part number: Z0336A-M. Replace glass with 5 mm ceramic glass only.

Cet appareil ne nécessite pas de protection thermique du sol du foyer; cependant, s'il est installé sur un plancher combustible, un protecteur de plancher non combustible doit être utilisé. La taille minimale de la protection de plancher est de: 35" x 42.125" (889 mm x 1070 mm) aux USA ou 45.25" x 52.125" (1150 mm x 1324 mm) au Canada.
L'AGENCE DE PROTECTION ENVIRONNEMENTALE DES U.S. - Certifié conformément aux normes d'émission de particules 2020 (certifié selon les méthode de test EPA 28R avec un taux d'émission de 0.81 g/h). Il est contraire aux réglementations fédérales d'utiliser cet appareil d'une manière incompatible avec les instructions d'utilisation du manuel du propriétaire ou si la chambre de combustion catalytique est désactivée ou retirée. Cet appareil nécessite une inspection et une réparation périodiques pour un bon fonctionnement; consultez le manuel du propriétaire pour obtenir des instructions.
FONCTIONNER UNIQUEMENT AVEC LA PORTE FERMÉE; ouvrir la porte UNIQUEMENT pour alimenter le feu. NE PAS OBSTRUER LES OUVERTURES D'AIR DE COMBUSTION ou l'espace sous l'appareil. Fournir suffisamment d'air extérieur pour la combustion. À utiliser uniquement avec du bois de chauffage solide; ne brûlez pas d'autres combustibles car cela rendrait le catalyseur dans la chambre de combustion inactif. Les performances de la chambre de combustion ou sa durabilité n'ont pas été évaluées dans le cadre de la certification. Numéro de pièce OEM de la chambre de combustion: Z0336A-M. Remplacez le verre par du verre céramique de 5 mm uniquement.

MANUFACTURED IN

☐ USA:
Blaze King Industries
146A Street
Walla Walla, WA.
99362

☐ CANADA:
Valley Comfort Systems
1290 Commercial Way
Penticton, B.C.
V2A 3H5

MANUFACTURE DATE

JAN ☐	FEB ☐	MAR ☐	APR ☐	MAY ☐	JUN ☐
JUL ☐	AUG ☐	SEP ☐	OCT ☐	NOV ☐	DEC ☐
2024 ☐	2025 ☐	2026 ☐	2027 ☐	2028 ☐	2029 ☐

170-0264 [02 25]

PREFACE

The content within this manual describes the installation and operation of the Blaze King CK30.2. It is against federal regulations to operate this appliance in a manner inconsistent with the operating instructions in this manual. Blaze King grants no warranty, implied or stated, for the installation and maintenance of this appliance and assumes no responsibility of any consequential damage(s).

EPA CERTIFICATION TEST DATA		
Burn Category	**CO Ave**	**Emission Rate**
Low Burn	0.03 g/min	0.20 g/hr
Med-low Burn (1)	0.32 g/min	0.62 g/hr
Med-low Burn (2)	0.39 g/min	0.46 g/hr
Med-high Burn	0.81 g/min	1.23 g/hr
High Burn	1.69 g/min	3.81 g/hr
EPA emission rate weighted average		0.81 g/hr

This appliance was tested and listed to CAN/ULC-S628:2022 & UL1482-11 (R2022) by OMNI-Test Laboratories. This appliance is certified to comply with the 2020 U.S. Environmental Protection Agency's particulate emission standards using crib wood. Under specific test conditions, this appliance has been shown to deliver heat at rates ranging from 10,094 to 36,076 Btu/hr. This appliance has a manufacturer-set minimum low burn rate that must not be altered. It is against federal regulations to alter this setting.

This appliance contains a catalytic combustor which needs periodic inspection and may require replacement to ensure proper operation. It is against federal regulations to operate this appliance if the catalytic combustor is deactivated or removed.

⚠WARNING

IF THIS APPLIANCE IS NOT PROPERLY INSTALLED OR OPERATED, A HOUSE FIRE MAY RESULT LEADING TO SERIOUS BODILY HARM AND EVEN DEATH. TO REDUCE THE RISK OF FIRE, PLEASE READ THIS ENTIRE MANUAL BEFORE INSTALLING AND OPERATING THIS APPLIANCE. CONTACT LOCAL BUILDING OR FIRE OFFICIALS ABOUT RESTRICTIONS AND INSTALLATION INSPECTION REQUIREMENTS IN YOUR AREA.

DO NOT OPERATE THIS APPLIANCE WITHOUT FULLY ASSEMBLING ALL COMPONENTS. DO NOT INSTALL DAMAGED, INCOMPLETE, OR SUBSTITUTE COMPONENTS. FAILURE TO POSITION COMPONENTS IN ACCORDANCE WITH THE DIAGRAMS IN THIS BOOKLET, OR FAILURE TO USE COMPONENTS SPECIFICALLY APPROVED WITH THIS APPLIANCE, MAY RESULT IN PROPERTY DAMAGE OR PERSONAL INJURY.

SMOKE DETECTORS, CARBON MONOXIDE DETECTORS, AND FIRE EXTINGUISHERS

IT IS VERY IMPORTANT TO HAVE AT LEAST ONE SMOKE DETECTOR AND ONE CARBON MONOXIDE MONITOR IN THE ROOM CONTAINING THE APPLIANCE. IT IS RECOMMENDED TO HAVE SEVERAL SMOKE DETECTORS AND CARBON MONOXIDE MONITORS POSITIONED IN KEY AREAS THROUGHOUT YOUR HOME. IF AN ALARM SOUNDS, EVACUATE THE HOME IMMEDIATELY. AFTER YOU HAVE DETERMINED THAT THERE IS NO RISK TO HEALTH OR PROPERTY, YOU MAY CORRECT THE CAUSE OF THE ALARM. DO NOT DE-ACTIVATE OR RELOCATE THE SMOKE DETECTORS OR CARBON MONOXIDE MONITORS. ALL HOMES WITH A SOLID FUEL BURNING APPLIANCE SHOULD HAVE AT LEAST ONE FIRE EXTINGUISHER IN A CENTRAL LOCATION THAT IS KNOWN TO ALL OCCUPANTS IN THE HOUSE.

CALIFORNIA PROPOSITION 65

WARNING: This product can expose you to chemicals including benzene, which is known to the State of California to cause cancer and birth defects or other reproductive harm. For more information:
www.P65Warnings.ca.gov

SPECIFICATIONS

CHINOOK 30.2, CK30.2 SPECIFICATIONS	
Flue Collar Opening	6” I.D. (152.4 mm)
Firebox Door Opening	18 5/8” x 9 7/8” (473 mm x 251 mm)
Firebox Depth	18” (457 mm) brick to brick, 20 1/2” (521 mm) brick to glass
Firebox Width	20” (508 mm)
Firebox Height	12.84” (326.1 mm)
Firebox Volume	2.843 cu. ft. (0.0805 m^3)
Tested Fuel Length	16.75” (426 mm)
Wood Capacity (approximate)	White Oak - 60 lb (27.2 kg) / Douglas Fir - 40 lb (18.1 kg)
Shipping Weight	400 lb (181 kg)

PARTS INCLUDED
1. Fire Poker
2. Manual Kit (w/ Warranty Cards, Catalytic Thermometer, Bypass Handle)

OPTIONAL ACCESSORIES	
1. S.Z1714 - Fan Kit	2. S.Z4015 - Rear Shield
3. 3” Outside Air Kit (S.Z1726B)	4. 4” Outside Air Kit (S.Z1726)

APPLIANCE DIMENSIONS

CK30.2

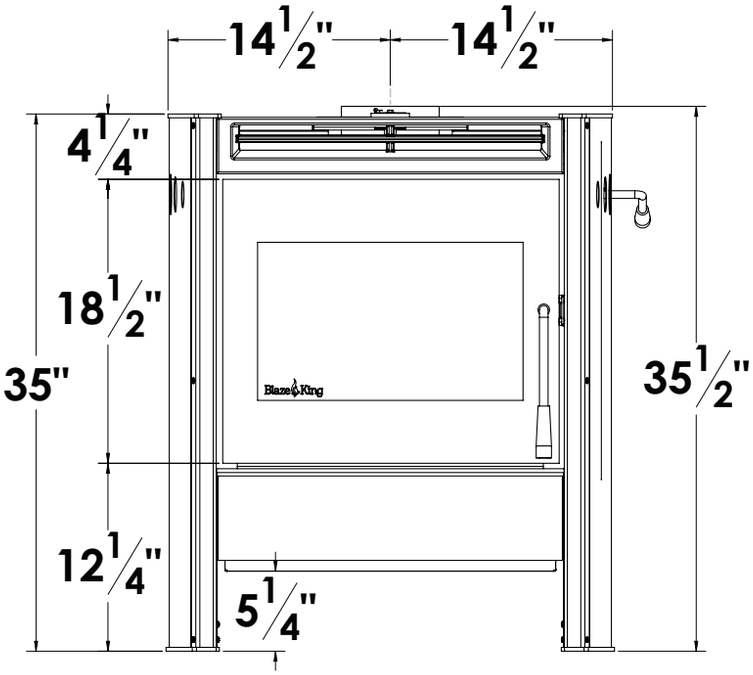

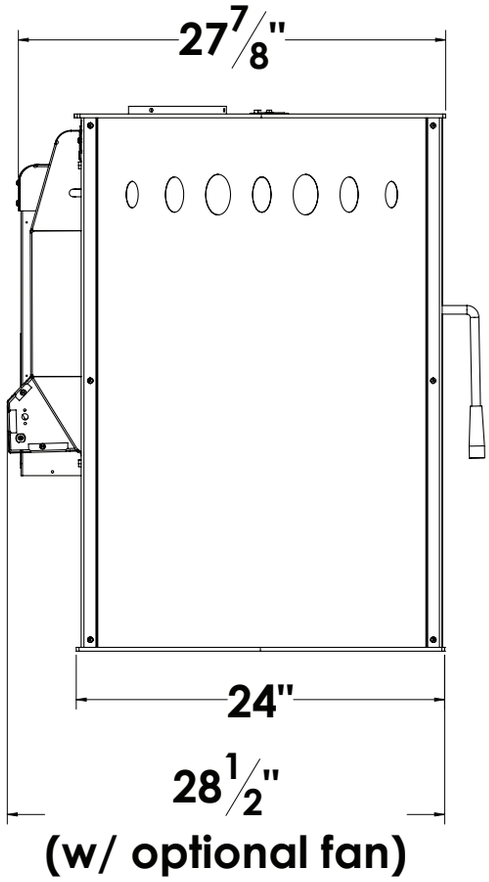

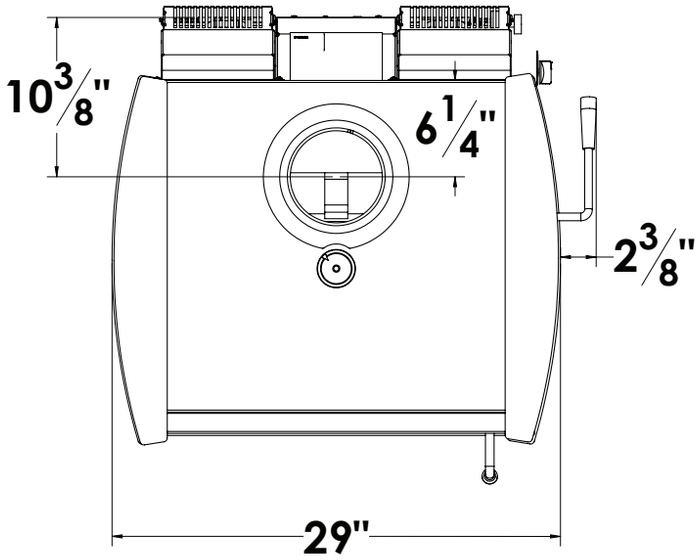

SAFETY CLEARANCES

MINIMUM CLEARANCES

This appliance must be installed in compliance with all local codes and regulations. Minimum clearances may only be reduced by means approved by the regulatory authority. Flue pipe must be 6” diameter and 24 MSG steel construction. Do not use aluminum or galvanized steel. Refer to local codes and pipe manufacturer specs for required minimum clearances. ***In Canada, a minimum 18” (450 mm) clearance from single wall pipe is required.**

RESIDENTIAL INSTALLATION	A	B	* C	* D	E	* F	J
Roof or Wall exit; Parallel or Corner min clearances	9.5” 241 mm	6” 153 mm	24.125” 603 mm	16.375” 416 mm	4” 102 mm	17.625” 448 mm	37” 940 mm
MOBILE HOME (USA) OR TRANSPORTABLE BUILDING (CAN) INSTALLATION							
Roof exit only; Parallel or Corner min clearances *Fan Kit or Rear Shield Kit + Outside Air Kit required	9.5” 241 mm	6” 153 mm	24.125” 603 mm	16.375” 416 mm	4” 102 mm	17.625” 448 mm	37” 940 mm

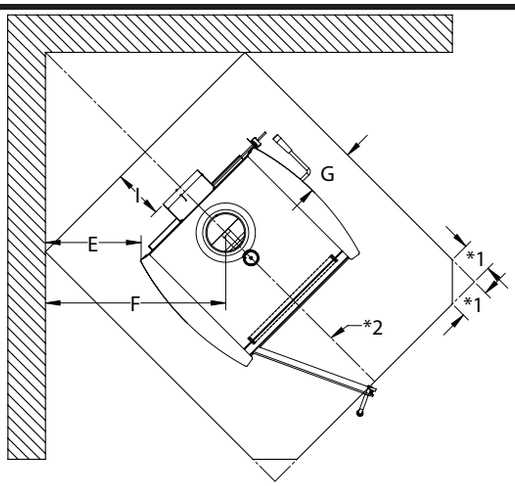

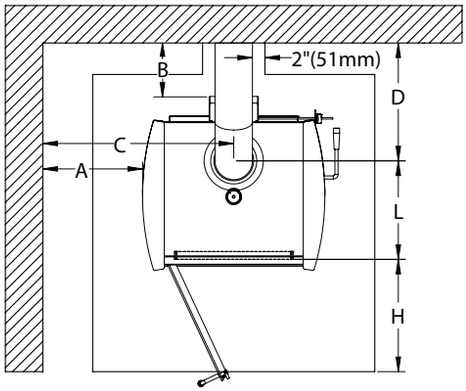

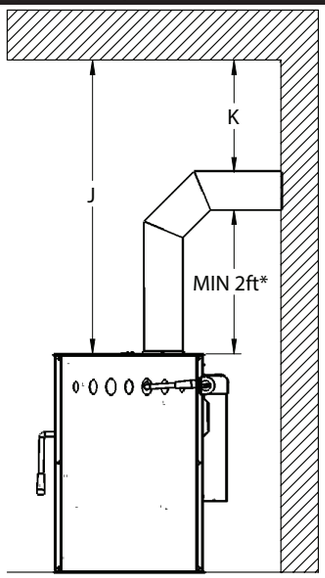

*3ft recommended

*1= 5.625″ in Canada and 2.125″ in USA

*2 = 58.625″ in Canada and 56.625″ in USA

G = 3” (77 mm) in USA 8” (203 mm) in Canada	H = 16” (406 mm) in USA 18” (456 mm) in Canada	I = 0” (0 mm) in USA 8” (203 mm) in Canada	* K = 18” (456 mm) for single wall pipe in Canada	L = 15.75” (400mm)

FLOOR PROTECTION

This appliance does not require thermal hearth pad floor protection; however, if installed on a combustible floor, a non-combustible floor shield must be used. In the USA, this floor shield must extend 16” out from the front and 8” out from either side of the fuel-loading door. In Canada, to comply with CSA B365, any combustible covering beneath the appliance and/or within the area extending horizontally at least 18” (450 mm) beyond the appliance on any side equipped with a door, and at least 8” (200 mm) beyond the appliance on other sides, shall be protected by a continuous, durable, non-combustible pad that will provide ember protection. The 18” (450 mm) ember protection required on any side with a door shall extend for the full width of the appliance plus the 8” (200 mm) required on each side of the appliance without a door. Where an appliance is installed less than 8” (200 mm) from a wall, the ember pad need only extend to the base of the wall. An ember pad shall not be placed on top of a carpet unless the pad is structurally supported to prevent displacement and distortion. A non-combustible shield is also required underneath the chimney connector and extend at least 2” on either side of the chimney connector. This shield does not need an insulation value, but must be listed under UL 1618-2009 (Type 1) and have a minimum size of:

35” x 42.125” (889 mm x 1070 mm) in USA and 45.25” x 52.125” (1150 mm x 1324 mm) in Canada

Blaze King does not recommend adhesive based vinyl flooring in front of appliances due to thermal expansion and warping which could be permanent.

CHIMNEY CONNECTIONS

⚠WARNING

DO NOT CONNECT TO OR USE THIS APPLIANCE IN CONJUNCTION WITH ANY AIR DISTRIBUTION DUCTWORK UNLESS SPECIFICALLY APPROVED FOR SUCH INSTALLATIONS THIS APPLIANCE MUST BE CONNECTED TO: 1) A CHIMNEY COMPLYING WITH THE REQUIREMENTS FOR TYPE HT CHIMNEYS IN THE STANDARD FOR CHIMNEYS, FACTORY-BUILT, RESIDENTIAL TYPE AND BUILDING HEATING APPLIANCE, UL 103, OR 2) A CODE-APPROVED MASONRY CHIMNEY WITH A FLUE LINER. FAILURE TO DO SO MAY RESULT IN A HOUSE FIRE CAUSING SERIOUS BODILY HARM.

COMBUSTION AIR

In air tight homes (most modern construction), careful considerations must be taken into account before installing a wood burning appliance. It is important to ensure there is adequate intake (combustion) air for all exhausting type appliances within the dwelling. Heat recovery ventilator (HRV) systems along with constant running fan motors in air handlers are examples of appliances that must be taken into account when balancing intake air (others include fireplaces, range hoods, dryers, etc.). It is recommended that a fresh air intake inlet into the room where the appliance is located be installed. Failure to do so may result in air starvation, smoke spillage, and carbon monoxide threats. Consult a HVAC specialist for proper installation practices.

DRAFT PERFORMANCE

Draft is the movement of combustion air into the appliance and out through the chimney as exhaust gas. In essence, it is the difference in pressure between the exhaust gas inside the chimney and the outside air that creates this movement. Warmer, lighter exhaust gasses in the chimney tend to move upward. The amount of draft created by your chimney can depend on chimney length, horizontal offsets, insulating properties, local geography, external forces, and other factors. External factors (outdoor temperature, wind, barometric pressure, topography, etc.) or internal factors within the dwelling (negative pressure from exhaust fans, chimneys, air infiltration, etc.) may adversely affect draft.

Too much draft can yield very high temperatures within the appliance and may result in damage. An uncontrollable burn or excessive room temperatures are indicators of too much draft. Too little draft may cause back puffing (smoke spillage) into the room and plugging of the chimney, chimney cap, or spark arrestor screen. Inadequate draft can also lead to low heat output and the inability for the combustor to remain active at low burn rate settings. Your Blaze King heater is a high efficiency appliance and will require fine tuning of your chimney system in order to maximize draft performance. **Blaze King cannot be responsible for external forces leading to less than optimal draft performance.**

ROLE OF THE CHIMNEY

The role of the chimney is to maintain sufficient draft to achieve complete combustion. To ensure maximum performance, Blaze King recommends a minimum vertical chimney height of 15 ft (from stove top to termination) when installing an appliance at sea level (and up to 1000 ft of elevation). For freestanding installations, it is also recommended to use double wall pipe from stove top adaptor to ceiling support box. Double wall pipe helps to keep the chimney warm and improve draft performance. For wall exit installations, a vertical length of 3 ft from stove top to elbow is recommended. It is also recommended to use a pair of 45 degree elbows rather than a single 90 degree elbow to allow for a smoother transition of airflow. When possible, outside chimney systems should be isolated from the external environment by building a chase around the chimney. Doing so will help keep the chimney warm and maintain sufficient draft (please refer to the "***RECOMMENDED FLUE HEIGHTS***" section). **Without a properly installed chimney, this appliance will not operate at its maximum performance which could yield incomplete combustion.**

CHIMNEY CONNECTIONS

VENTING SYSTEM

A venting system consists of:

- Appliance Connector - a “stove top adaptor” that creates a positive connection between the appliance and flue pipe.
- Flue Pipe - either single or double wall pipe that is only used within the room, connecting the appliance to either a ceiling box or wall pass through.
- Chimney - a listed, factory built component with either 1” or 2” insulation that is suitable for use with solid fuels, conforming to CAN/ULC-S629 in Canada or UL 103HT in the USA. Note: This appliance may also be connected to a code compliant Masonry Chimney.

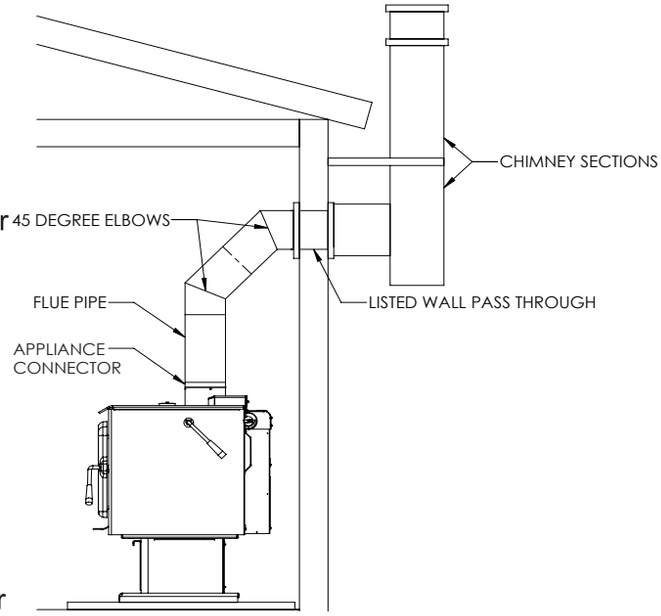

Do not install the chimney directly at the outlet of the appliance. A chimney connector is required unless the appliance is specifically approved for that type of installation. The flue pipe between the appliance connector and chimney should be kept as direct as possible. Do not use a flue pipe to pass through an attic or roof space, closet or similar concealed space, or a floor or ceiling. All joints within the venting system must be securely fastened with sheet metal screws. A chimney support package must be used when a connection is made through a ceiling to a listed prefabricated chimney. A listed wall thimble must be used when a connection is made through a combustible wall to a chimney. These accessories are necessary to provide safe clearances to combustible walls and ceilings as these components can get extremely hot during use. In the event of a creosote fire, temperatures inside the chimney may exceed 2000F (1100°C). An effective vapor barrier must be maintained at the location where the chimney or vent component penetrates the exterior structure. Do not connect this appliance to a chimney serving another appliance, doing so will affect the safe operation of both appliances and will void warranty. You must comply with the local authority having jurisdiction and, in Canada, CSA installation standard B365-M87.

CONNECTION TO A METAL PREFABRICATED CHIMNEY

Refer to the prefabricated chimney manufacturer’s installation instructions to ensure safe clearance to combustibles are maintained when installing. All components (ceiling support package or wall pass through and “T” section package, fire stops, insulation shield, roof flashing, chimney cap, etc.) must be purchased from the same prefab chimney manufacturer. There are two common methods of a prefab chimney installation: the recommended method is to install the chimney inside the dwelling up through the ceiling(s) and the roof, while the alternative method is to install an exterior chimney that runs up the outside of the structure. Though not recommended, the alternative method is sometimes it is the only option. In that case it is recommended to build a chase around the external chimney.

The chimney must meet a minimum height above the roof and/or other obstruction(s) for safety purposes and to ensure sufficient draft. It is required that the chimney be at least 3ft higher than the highest point where it passes through the roof and at least 2ft higher than the highest part of the roof or any obstruction within 10ft (measured horizontally) of the chimney. Refer to the “***RECOMMENDED CHIMNEY HEIGHTS***” chart for minimum flue height recommendations and CAN/ULC-S629 in Canada or UL-103HT in the USA for installation codes.

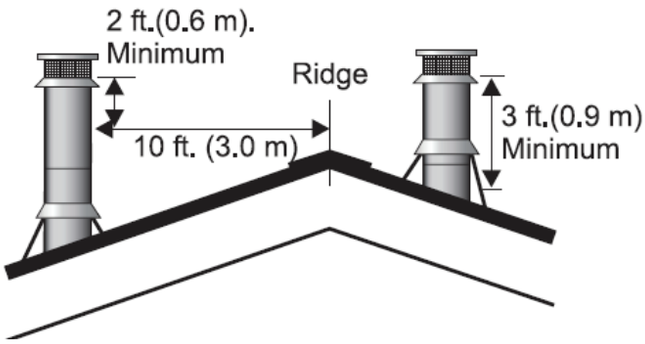

CHIMNEY CONNECTIONS

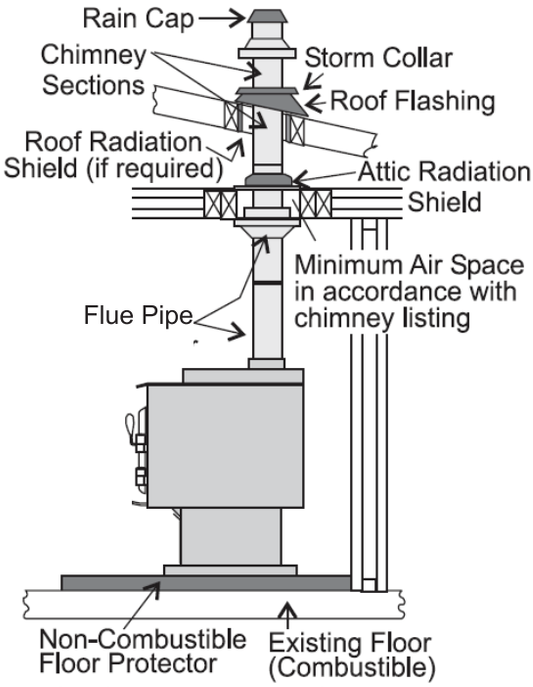

Prefab Chimney Through Ceiling Installation

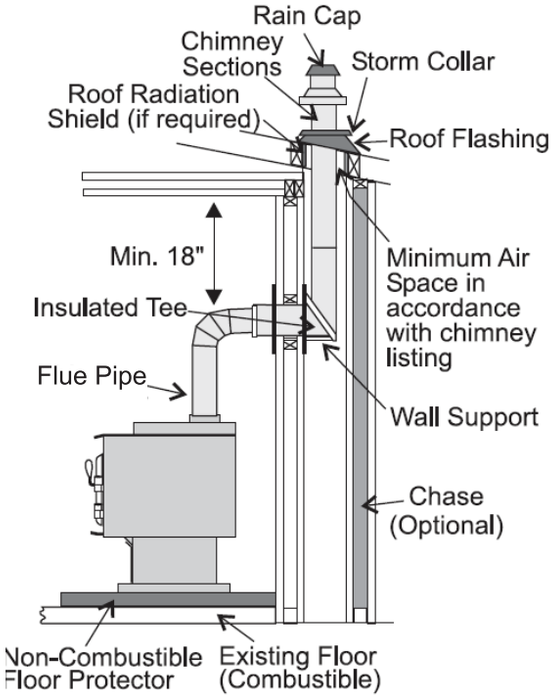

Prefab Chimney Exterior Installation

CONNECTION TO A MASONRY CHIMNEY

First and foremost, ensure the masonry chimney meets the minimum standards per the National Fire Protection Association by having it inspected by a certified professional. There must be no cracks, no loose mortar, and no signs of deterioration or blockage. Ensure the chimney is properly cleaned before installing the appliance. When connecting the appliance through a combustible wall, special methods are required; refer to local jurisdiction for the approved methods of passing a chimney connector through a combustible wall in your area (In the USA, refer to the NFPA minimum standards, and in Canada, refer to CAN/CSA-B365, the Installation Code for Solid Fuel Burning Appliances and Equipment). **Blaze King recommends the use of a stainless steel liner, preferably insulated, inside a masonry chimney. This is to help maintain a proper draft to achieve optimal performance of the appliance.**

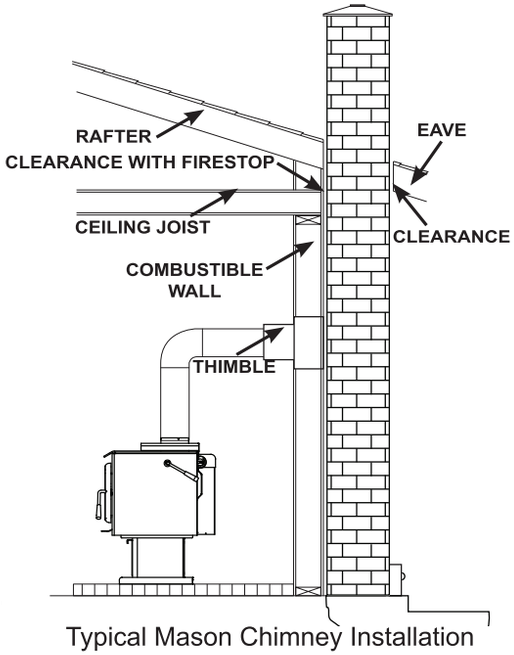

Typical Mason Chimney Installation

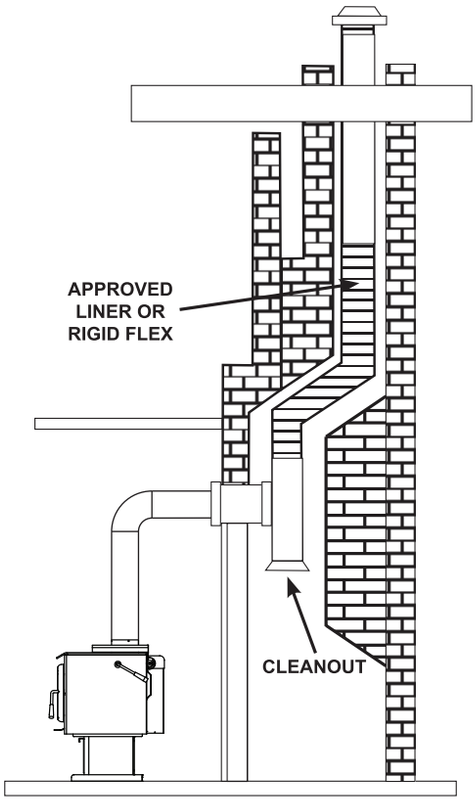

Blaze King Recommend Installation

RECOMMENDED CHIMNEY HEIGHTS

Every installation is unique, especially when considering geographical location. As previously mentioned, maintaining sufficient draft is of utmost importance, but this can be a challenge as draft can be heavily influenced by topographical and geographical phenomena. The understanding of pressure planes and the stack effect are imperative in planning and executing a successful installation.

As previously mentioned, Blaze King recommends a minimum vertical chimney height of 15 feet (from stove top to termination) when installing an appliance at sea level (and up to 1000 feet of elevation). If the install is at a higher elevation, please refer to the table below for recommended chimney heights:

MINIMUM RECOMMENDED CHIMNEY HEIGHT				
ELEVATION ABOVE SEA LEVEL	**NUMBER OF ELBOWS**			
	0	**2 X 15°**	**2 X 30°**	**2 X 45°**
0 - 1000 ft 0 - 305 m	15 ft 4.6 m	16 ft 4.9 m	18 ft 5.5 m	19 ft 5.8 m
1000 - 2000 ft 305 - 610 m	15.5 ft 4.7 m	16.5 ft 5.0 m	18.5 ft 5.6 m	19.5 ft 5.9 m
2000 - 3000 ft 610 - 914 m	16 ft 4.9 m	17 ft 5.2 m	19 ft 5.8 m	20 ft 6.1 m
3000 - 4000 ft 914 - 1219 m	16.5 ft 5.0 m	17.5 ft 5.3 m	19.5 ft 5.9 m	20.5 ft 6.2 m
4000 - 5000 ft 1219 - 1524 m	17 ft 5.2 m	18 ft 5.5 m	20 ft 6.1 m	21 ft 6.4 m
5000 - 6000 ft 1524 - 1829 m	17.5 ft 5.3 m	18.5 ft 5.6 m	20.5 ft 6.2 m	21.5 ft 6.6 m
6000-7000 ft 1829 - 2134 m	18 ft 5.5 m	19 ft 5.8 m	21 ft 6.4 m	22 ft 6.7 m
7000 - 8000 ft 2134 - 2438 m	18.5 ft 5.6 m	19.5 ft 5.9 m	21.5 ft 6.6 m	22.5 ft 6.9 m
NOTE: No more than one offset (two elbows) are allowed. Two 45°elbows equal one 90° elbow				

For other common chimney components, use the following vertical height(s) to compensate for:

90° elbow = 2.0 ft (0.610 m)
"T" section = 3.0 ft (0.915 m)
1.0 ft (0.305 m) of horizontal run = 2 ft (0.610 m) of vertical rise

Example Chimny Height Calculation (at sea level):

Min Chimney Height = 15.0 ft (4.575 m)
One 90° Elbow = 2.0 ft (0.610 m)
2.0' Horizontal Run = 4.0 ft (1.200 m)
One Base "T" = 3.0 ft (0.915 m)
Final Chimney Height = 24.0 ft (7.3 m)

The above figures are only guidelines, please refer to the "***DRAFT PERFORMANCE***" section.

⚠WARNING

IF THIS APPLIANCE IS NOT PROPERLY INSTALLED OR OPERATED, A HOUSE FIRE AND/OR PERSONAL INJURY MAY RESULT. TO REDUCE THE RISK OF FIRE AND PERSONAL INJURY, FOLLOW THE INSTALLATION INSTRUCTIONS. CONTACT LOCAL BUILDING OR FIRE OFFICIALS ABOUT RESTRICTIONS AND INSTALLATION INSPECTION REQUIREMENTS IN YOUR AREA.

ALCOVES AND FIREPLACES

In Canada, DO NOT INSTALL THIS APPLIANCE IN AN ALCOVE or FIREPLACE.
In USA, please adhere to minimum safe clearance dimensions.

ELECTRICAL CONNECTION

Your Blaze King fan kit is equipped with a three-prong (grounded) plug to decrease shock hazard. This plug should be inserted directly into a properly grounded, three hole receptacle. DO NOT CUT OR REMOVE THE GROUNDING PRONG FROM THIS PLUG. DO NOT ROUTE THE POWER CORD IN FRONT OF OR UNDER THE APPLIANCE.

MOBILE HOME or TRANSPORTABLE BUILDING INSTALLATION

For Mobile Home (in USA) or Transportable Building (in Canada) installations, an Outside Air Kit (S.Z1726 / S.Z1726B) and either a Fan Kit (S.Z1714) or Rear Shield Kit (S.Z4015) are required. It is recommended that the kits be installed prior to appliance installation (refer to the instructions provided with the kits).

When a metal prefabricated chimney is used, the manufacturer's installation instructions must be followed precisely. The ceiling support package must be purchased from the same manufacturer (ie. fire stops, insulation shield and roof flashing, chimney cap, etc). Be sure to maintain required safe clearances to combustibles as recommended by the manufacturer. The flue pipe must be double wall, close clearance type with either CAN/ULC-S629 or ULCS610 designation (single wall pipe is not allowed). Insulated chimney components must be a listed factory built chimney suitable for use with solid fuels and conforming to, CAN/ULC-S629 in Canada or UL-103HT in the USA. Where the space heater is installed in mobile home or transportable building, removal of the chimney is required for transportation of the building

Note: Under no circumstances should the fresh air intake hose (Outside Air Kit) penetrate a wall at a location higher than the bottom of the intake air channel on the rear of the appliance (ie. the fresh air hose must feed up into the intake channel on the rear of the appliance).

CAUTION: THE STRUCTURAL INTEGRITY OF THE MOBILE HOME FLOOR, WALL, AND CEILING/ROOF MUST BE MAINTAINED.

⚠WARNING

THE APPLIANCE MAY ONLY BE INSTALLED IN AN OPEN AREA THAT IS NOT USED FOR SLEEPING. UNDER NO CIRCUMSTANCES SHOULD THE APPLIANCE BE INSTALLED INSIDE A BEDROOM. FAILURE TO COMPLY MAY LEAD TO SERIOUS BODILY HARM IN THE EVENT OF A HOUSE FIRE.

For mobile home or transportable building installations, the appliance must be securely fastened to the floor using the tie-downs provided in the Outside Air Kit. To access the tie down holes, both the left and right Side Shields must be removed (refer to ***"SIDESHIELD REMOVAL"*** for removal process).

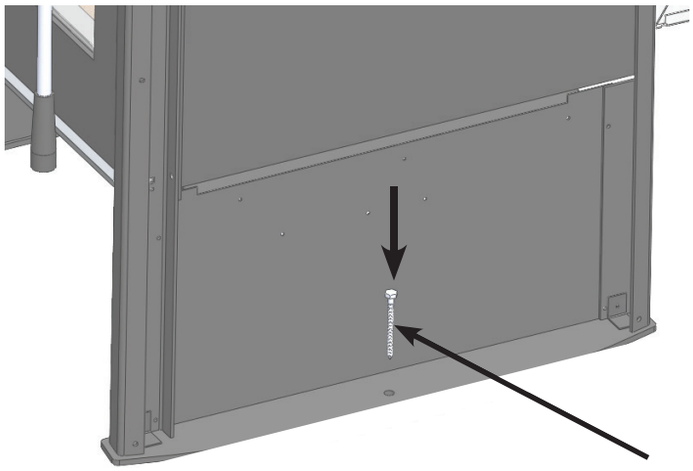

OPTIONAL ACCESSORIES

- **REAR SHIELD KIT (S.Z4015)** - used to achieve minimum rear clearances; required for mobile home or alcove installations.
- **FAN KIT (S.Z1714)** - used to disperse super heated air from appliance throughout the dwelling; required for mobile home or alcove installations.
- **OUTSIDE AIR KIT (S.Z1726 / S.Z1726B)** - The fresh air intake hose is a flexible metal tube used to supply combustion air into the appliance from the outdoor environment. It can be installed through an external wall or up through the floor (DO NOT CHANGE THE STRUCTURAL INTEGRITY OF THE FLOOR). This hose must be kept open at all times. **Under no circumstances should the fresh air intake hose penetrate a wall at a location higher than the bottom of the intake air channel on the rear of the appliance (ie. the fresh air hose must feed up into the intake channel on the rear of the appliance).**

SIDE SHIELD REMOVAL

To remove the Side Shields, follow these steps:

1. Unfasten the two top screws (**A**) and then remove the Side Shield Cover Plate by lifting up.

2. Unfasten the remaining x4 screws to free the Side Shield.

3. Grasp the Side Shield at the upper and lower cut outs and lift up to remove (ensure the Bypass Handle is removed before removing the Right Side Shield).

4. To reinstall, follow these steps in reverse order.

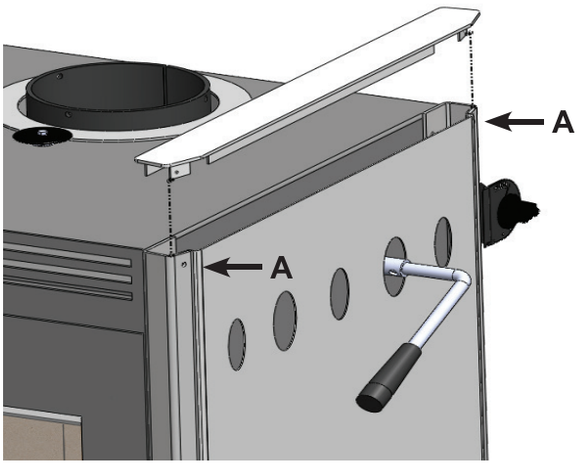

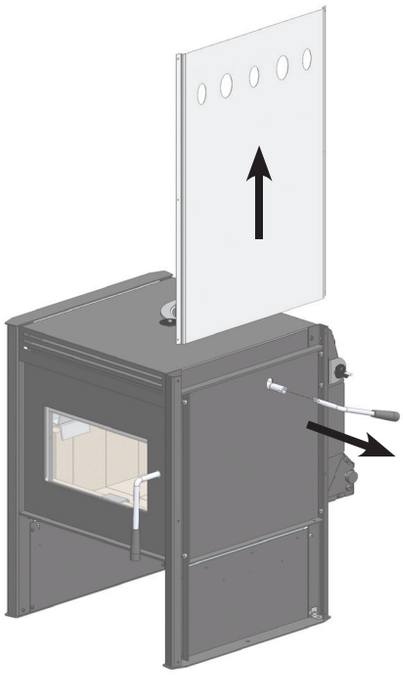

DOOR REMOVAL

To remove the Loading Door, follow these steps:

1. Insert a 1/4” allen key into the head of the shoulder bolton the top side of the upper hinge.
2. Use a 9/16” wrench to secure the nut on the bottom side of the upper hinge.
3. Rotate the shoulder bolt counter-clockwise to remove the nut.
4. Follow the same procedure to remove the nut on the lower hinge.
5. While holding the door securely, pull out the shoulder bolts to remove the Door.
6. To Install the Door, follow these steps in reverse order.

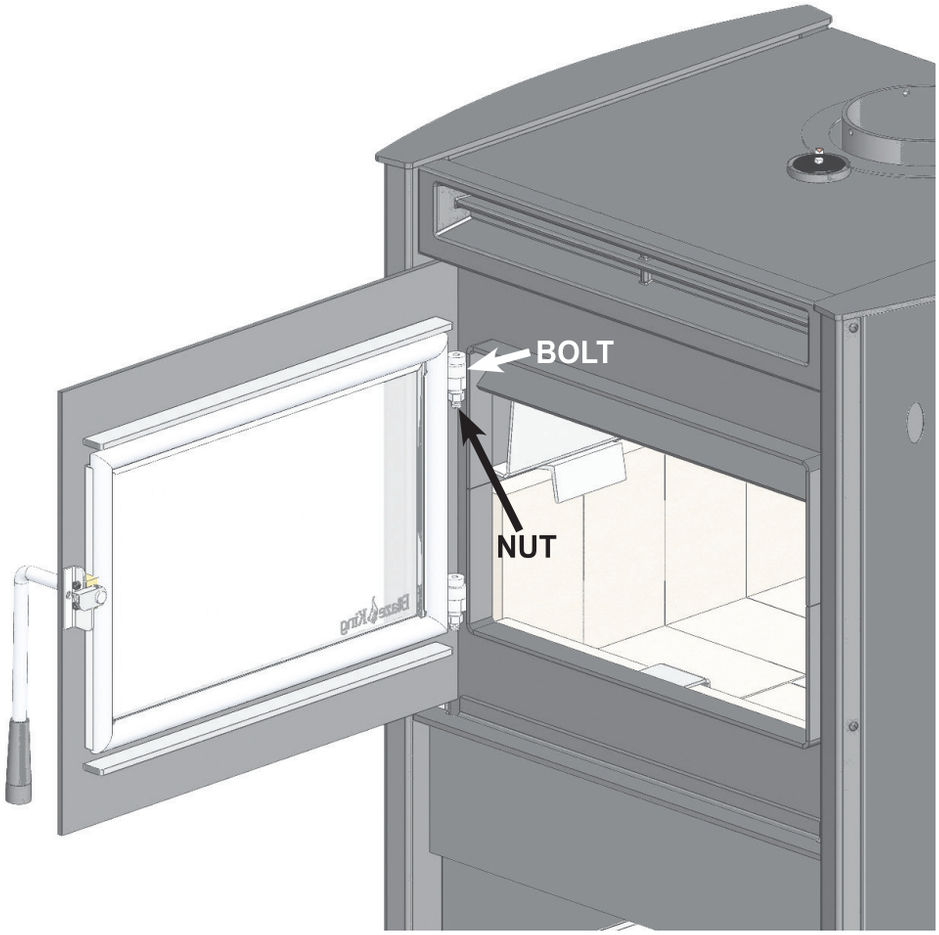

⚠WARNING

DO NOT OPERATE THIS APPLIANCE WITH THE LOADING DOOR UNINSTALLED OR LEFT OPEN. DOING SO MAY LEAD TO A RUN AWAY FIRE RESULTING IN PROPERTY DAMAGE.

YOUR FIRST FIRE!

The following pages contain information on the operation of the major components on your Blaze King appliance. Please take the time to read through this section as it will give you a better understanding of how your appliance works. This understanding will help you to operate your appliance at its optimum level thus extended its life while allowing you to get the highest efficiencies from your heater.

INTRODUCTION

All Blaze King wood burning appliances are designed as radiant room space heaters. They have been tested and certified to be installed in insulated, habitable rooms within your dwelling. The appliance has not been designed to be installed in a concrete, uninsulated basement or in a shop/garage environment. Such applications may cause the thermostat to be unresponsive due the constant call for heat resulting in appliance being in a constant over fire situation. **Consequential damage from this type of operation will deem the warranty null and void.**

All Blaze King wood appliances are designed to burn cord wood only. Dimensional timber off cuts, very low moisture content small diameter wood and pressed wood logs, when used in excess, may result in excessive internal firebox temperatures that can cause irreversible damage to the firebox's internal structure. Excessive temperatures can be caused by many small pieces of very low moisture content wood being used as a primary fuel source. This may be evident by warping or warped internal plates and retainers, possible cracking of the outer firebox and possibly premature failure of the catalytic combustor. All wood appliances should be cleaned out and inspected at the end of every burning season to identify if any internal components have been affected during the burning season. If problems are observed steps must be taken to identify and correct the problem before the subsequent burning season. Failure to do so will result in the warranty of the product being null and void.

EFFICIENCY

Efficiency was determined using the method outlined in B415.1-10 test method. It is represented by the Higher Heating Value (HHV) as the fuel used during testing contains between 19% - 25% water moisture included in the total calculated fuel weight. (Other test methods such as LHV or Low Heating Value, does not take the water moisture into account).

Annual Fuel Utilization Efficiency (AFUE) attempts to represent the actual, season long, average efficiency of an appliance. HHV is the actual, calculated average efficiency obtained under test conditions. Using correctly seasoned wood is important when trying to gain efficiency. The more seasoned (dry) the wood, the higher the efficiency (less energy wasted on eliminating moisture during combustion). Operating your Blaze King at lower settings will result in higher efficiencies as the fuel will undergo a more complete combustion. For maximum efficiency, the appliance should be installed in a location that provides adequate intake/combustion air as well as a location that will allow for the straightest run of optimal chimney length to establish necessary draft.

FAN OPERATION

Fans are an optional item for most Blaze King appliances. If fans are installed on your appliance, they should be turned off until the stove reaches normal operating temperatures. Approximately 30 minutes after a fire has been established within the appliance, the fan speed should match the thermostat control setting. (i.e. if your thermostat is set to a medium heat output then your fan should also be set at medium, low—low, high—high etc.). We recommend the use of fans on all of our wood appliances. The fan system recirculates room air over the hot surfaces of your appliance and helps spread this super heated air around your home.

SELECTING WOOD

It takes a great deal of energy to evaporate the moisture contained in green or wet wood and that energy will not be heating your home. Green or wet wood will also greatly increase creosote issues. To ensure that your wood fuel has a moisture content of 20% or lower, only use seasoned wood that has been split, stacked, and protected from rain or snow for at least 24 months. Firewood should be split and stacked in a manner that allows for air flow to all areas.

Both hardwood and softwood burn equally well in this appliance, but the more dense hardwood will weigh more per cord and burn a little slower and longer. Never burn salt-water driftwood as it is very corrosive and will deteriorate the structure of the appliance. The burning of salt-water driftwood will void the warranty. The only way to accurately determine wood moisture is to purchase and measure with a moisture meter.

⚠WARNING

THIS APPLIANCE IS DESIGNED TO BURN NATURAL WOOD ONLY. DO NOT BURN WET UNSEASONED WOOD. DOING SO CAN CAUSE EXCESSIVE CREOSOTE ACCUMULATION AND IF IGNITED, CAN CAUSE A CHIMNEY FIRE THAT MAY RESULT IN A HOUSE FIRE CAUSING SERIOUS BODILY HARM. BURNING AIR DRIED SEASONED WOOD WILL REDUCE THE RISK OF CHIMNEY FIRES AND YIELD HIGHER EFFICIENCIES AND LOWER EMISSIONS.

HOW TO USE MOISTURE METERS

1. Randomly select three logs from your wood pile and split each one down the middle.
2. Three points of measurement are required to determine the moisture content of each log: 2” (5 cm) from either end and in the middle of the split surface of the log. To take these measurements, insert the moisture meter pins at the points described, keeping the pins in line with the wood grain. Record each measurement.
3. Do this to all three logs and take an average of the readings (this is an approximate indication).

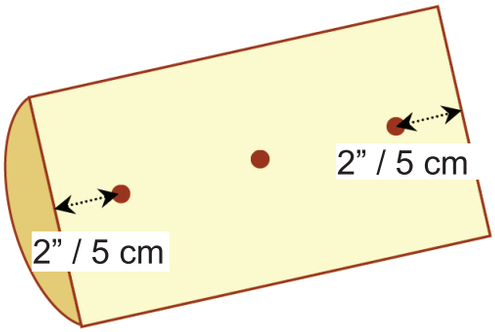

⚠WARNING

DO NOT BURN TREATED WOOD, COAL, CHARCOAL, COLORED PAPER, CARDBOARD, SOLVENTS OR GARBAGE. BURNING THESE MATERIALS MAY RESULT IN THE RELEASE OF TOXIC FUMES AND/OR CARBON MONOXIDE WHICH MAY RESULT IN POISONING. DO NOT BURN GARBAGE OR FLAMMABLE FLUIDS SUCH AS GASOLINE, NAPHTHA, OR ENGINE GEL. DO NOT USE CHEMICALS OR FLUIDS SUCH AS GASOLINE TYPE LANTERN FUEL, KEROSENE, OR CHARCOAL LIGHTER FLUID TO START OR FRESHEN UP A FIRE IN THIS APPLIANCE. DOING SO MAY LEAD TO OVER FIRING RESULTING IN A HOUSE FIRE AND SERIOUS BODILY HARM.

FIRE POKER

The steel fire poker that is provided with this appliance serves two purposes:

1) to manipulate fuel loads
2) to remove the ash plug via hook welded to the top plate.

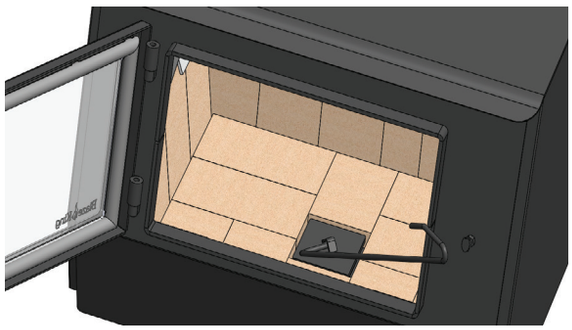

BYPASS DOOR

Your catalytic wood burning appliance is fitted with a bypass door which allows exhaust from the fire to temporarily bypass the catalytic combustor. The bypass door is located inside the dome of the firebox at the top of the appliance. It is a hinged, steel plate door and is controlled by the bypass handle located on the right side of the appliance. When the handle is pointing forward, the bypass door is open. To close the bypass door you must rotate the handle clockwise until it points to the rear of the appliance. To ensure the bypass door is fully closed, push down on the bypass handle until you hear a positive click.

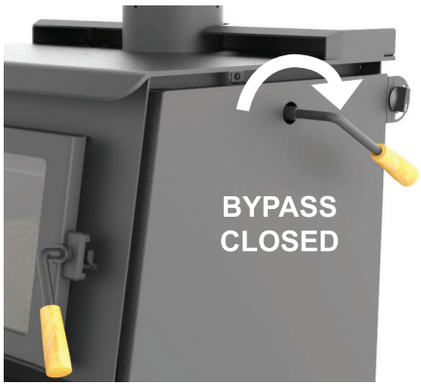

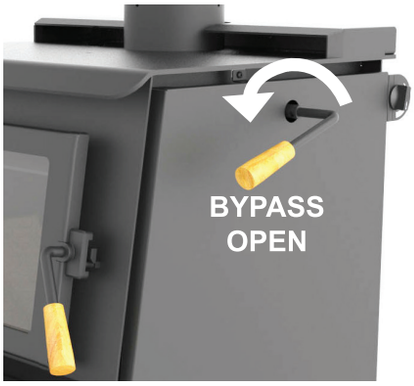

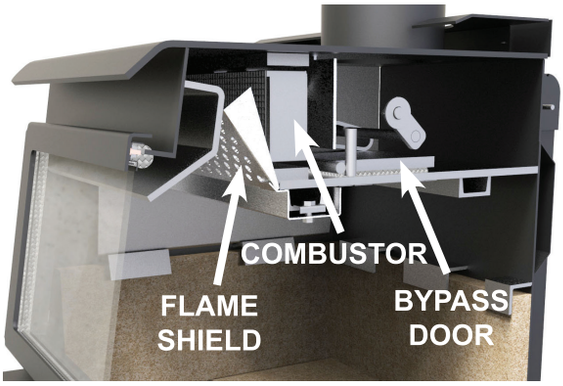

CATALYTIC THERMOMETER

The catalytic thermometer is located on the top of the appliance. Its sole purpose is measure the exhaust gasses after they have passed through the combustor to indicate whether the combustor is ACTIVE or INACTIVE. It is important to ensure that the appliance is operated in the ACTIVE zone. When the thermometer reads INACTIVE it means that the combustor temperature is below 500F and is not producing a clean burn. For the most accurate reading, turn the fan off for approximately 5 minutes before reading the thermometer. For calibration instructions, please refer to the "***MAINTENANCE***" section.

THERMOSTAT

The thermostat is located at the rear of the appliance and is controlled by the thermostat knob which is located at the upper right rear corner of the appliance. When the knob is positioned at the HIGH setting, the appliance will operate at its highest burn rate and deliver its maximum heat output. As the knob is rotated counter clockwise the burn rate will decrease along with heat output. Burn rate is greatly influenced by location, installation, and external environment, so you may find it necessary to reposition the knob until you find the ideal setting to suit your situation. Please note that all adjustments to the thermostat should be done gradually as too rapid a change may cause the thermostat to operate improperly. The thermostat has a manufacturer-set minimum low burn rate that must not be altered. It is against federal regulations to alter this setting or otherwise operate this wood heater in a manner inconsistent with operating instructions in this manual.

HIGH SETTING
MAXIMUM HEAT OUTPUT

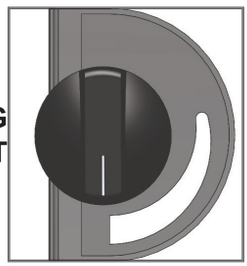

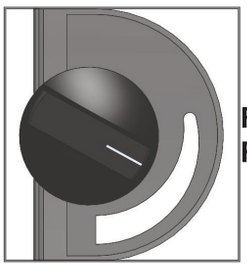

ROTATE COUNTER CLOCKWISE
FOR REDUCED HEAT OUTPUT

USABLE FIREBOX LOADING AREA

Your Blaze King wood heater is designed and tested to be an exceptionally clean burning and highly efficient heater. To obtain both clean burning and utmost efficiencies, you should **ONLY** load fuel in the area indicated by the grey shaded area in the image below. Attempting to load fuel in any additional space will void your warranty and represents a safety hazard.

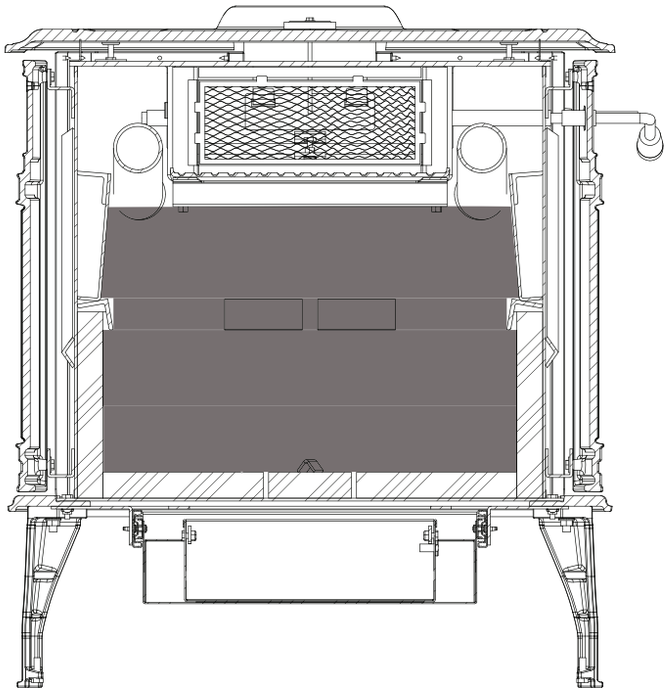

Inside fuel loading area - FRONT VIEW

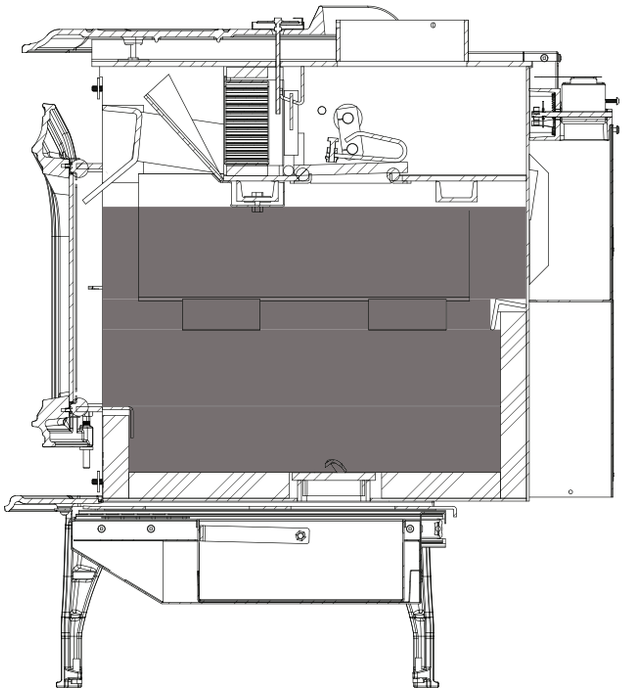

Inside fuel loading area - SIDE VIEW

LIGHTING THE FIRE

NOTE: As you heat up the appliance for the first time, the paint will go through a curing process and will give off a strong odor coupled with smoke. To minimize the inconvenience, burn the stove at a low temperature setting for several hours. It is recommended to open a door or window until the odor and smoke dissipates. You may also notice a change in color as the paint cures, this is normal and will appear uniform after subsequent firings.

1. **ENSURE ALL BRICKS ARE CORRECTLY POSITIONED INSIDE THE FIREBOX AND BUILD THE FIRE DIRECTLY ON THE BRICK IN THE BOTTOM OF THE STOVE. DO NOT USE A GRATE.**
2. Position the thermostat to the **HIGH** setting and turn the fan (if equipped) **OFF**.
3. Open the bypass then open the loading door.
4. Place 10 balls of non-glossy paper towards the front of the bottom of the firebox then stack 20 pieces of kindling on top of the paper in a crisscross fashion (leaving air gaps in between sticks).
5. Light the fire and allow it to get a good start while leaving the loading door cracked open. **DO NOT LEAVE THE STOVE UNATTENDED.**
6. Once the kindling is fully on fire, place two or three medium size logs onto the fire. Keeping the loading door unlatched, allow the logs to catch fire. **DO NOT LEAVE THE STOVE UNATTENDED.**
7. Once the logs are burning, latch the loading door shut. Once loading door is closed and combustor temperature begins to climb, close the bypass door, turn fan(s) on to high (if equipped). Leaving the loading door open after the wood load has caught fire may cause premature failure of the catalytic combustor.
8. When nearly all of the wood in the firebox is fully burning and the catalytic thermometer is in the active zone, open the bypass door and loading door, and finish loading the appliance. Lay the wood as far back in the stove as possible. Latch the loading door shut, and close the bypass door.
9. Let the fire burn with the thermostat at the **HIGH** setting until the fire is well established. This ensures that the stove, catalyst, and wood load are all stabilized at optimum operating temperatures. The temperature in the stove and the gases entering the combustor must be raised to at least 500F (indicated by the thermometer needle in the **ACTIVE ZONE**) for catalytic activity to be initiated.
10. Gradually turn the thermostat down to the desired heat output setting once the fire is well established. Please note that if the thermostat is turned down too low too quickly, the fire may go out or the combustor may stop working, indicated by the thermometer needle falling into the **INACTIVE ZONE**. If this happens, simply turn the thermostat back to a higher heat output setting to let the fire reestablish itself.
11. Turn the fan (if equipped) on after the initial warm up.

Probably the least understood requirement of maintaining a good fire is that of establishing a good base of coals or embers. A glowing hot coal bed will help to maintain more even temperatures as well as assist in relighting the next fuel load. Put as much wood into the appliance as needed, practice will teach the amount of wood necessary to keep the fire going until the next reloading time. Don't be afraid to fill it completely if necessary. With the Blaze King thermostat, the wood will only burn at the rate set on the thermostat. Once the fire is established, the appliance should be left to complete the full burn cycle. This is evident by a) only a glowing coal bed (ember bed) remaining or b) the catalytic thermometer hovers just inside the active zone. Following this procedure will maximize the efficiency of the appliance as well as limit exhaust emissions and smoke spillage.

RELOADING PROCEDURE

WHEN PREPARING TO RELOAD, IF THE NEEDLE ON THE CATALYTIC THERMOMETER IS STILL IN THE ACTIVE ZONE, FOLLOW THE PROCEDURE BELOW; IF THE NEEDLE HAS DROPPED INTO THE INACTIVE ZONE, REFER BACK TO THE "LIGHTING THE FIRE" PROCEDURE ON THE PREVIOUS PAGE.

It is important to note that the catalytic thermometer is simply displaying the temperature of the catalytic combustor. It may be used as an aid when it comes to identifying a reload point, but other factors such as lack of fuel in the firebox or dropping room temperatures should be used as well.

1. Have your next load of wood ready before beginning. Turn the thermostat to **HIGH** to ensure the remaining coal bed is active before reloading. Wait a few minutes for the air flow to stabilize.
2. To help minimize smoke spillage into the room, open the bypass door and again wait a few minutes for the air flow to stabilize.
3. Open the bypass door and crack open the loading door to allow ambient room air to be introduced into the firebox, this may take a minute to stabilize.
4. Slowly open the loading door and proceed to reload the firebox. If you experience excessive smoke spillage, slightly close the loading door to re-establish a draft through the chimney.
5. Once loaded, latch the loading door shut and (if opened) close the bypass door immediately. Let the fire burn on the HIGH thermostat setting until the fire is well established. At that point, turn the thermostat down to the desired setting. Keep in mind, you may not see a large amount of flame activity in the lower thermostat setting. The thermometer needle will remain in the active zone indicating that the burn cycle is continuing.
6. Should you burn the stove on a very low setting for extended periods of time, you will begin to see creosote deposits forming on the glass door. To remove these deposits, simply run the stove on **HIGH** for approximately 30 minutes. The **HIGH** setting will burn off most of the deposits.

Note: Our loading instructions are outlined in general terms due to the variables that arise with each installation. Such variables include type of wood fuel, chimney height and configuration, installation altitude, seasonal weather conditions, draft, and the desired heat output required. Over time you will learn which settings are necessary to achieve optimal performance with your specific installation.

⚠WARNING

THIS APPLIANCE IS HOT WHILE IN OPERATION. CHILDREN AND PETS MUST BE KEPT FROM TOUCHING THE APPLIANCE WHEN IN USE. COMBUSTIBLE OBJECTS MUST BE KEPT A MINIMUM OF 48"(1219 MM) FROM THE FRONT OF THE APPLIANCE. COMBUSTIBLE MATERIAL SUCH AS CLOTHING OR FURNITURE PLACED TOO CLOSE TO THE APPLIANCE CAN CATCH FIRE. DO NOT STORE WOOD WITHIN THE SPECIFIED SAFETY CLEARANCES OR WITHIN THE SPACE REQUIRED FOR RE-FUELING AND ASH REMOVAL. FAILURE TO COMPLY MAY CAUSE SKIN BURNS OR RESULT IN A HOUSE FIRE CAUSING SERIOUS BODILY HARM.

OPTIMAL LOW BURN THERMOSTAT SETTING

Your Blaze King appliance was tested and certified in accordance to the New Source Performance Standards for Residential Wood Heaters. During this test series, the low burn rate of the unit was determined by setting the thermostat knob to a position that yielded the lowest burn rate achievable. If you find that you are setting your thermostat beyond the test setting, please note that if the thermostat is turned down too low the fire will go out or the combustor may stop working which is indicated by the thermometer needle falling into the **INACTIVE ZONE**. If this happens, simply turn the thermostat back to a higher heat output setting and let the fire reestablish itself.

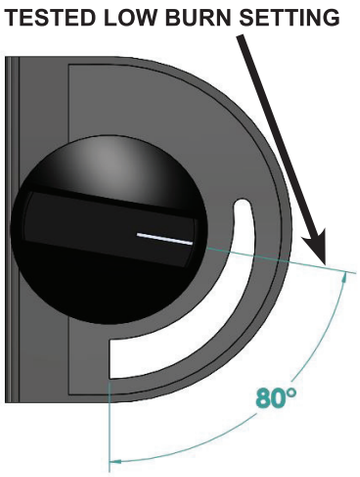

WOOD BURNING IN THE SHOULDER SEASON

There are a few things to consider if you choose to light a fire during the spring or fall seasons when the outside temperature is milder, perhaps 55F to 70F (13°C to 21°C).

You may notice smoke spillage out of the loading door when it is opened during start up or reloading. This is caused by a lack of natural draft within the chimney system. The temperature difference between the chimney system and the outside air causes flue gasses to be drawn up and out of the chimney. Smaller temperature differences produce less draft in your chimney system than larger temperature differences. This air movement, referred to as Stack Effect, is also influenced by air density and moisture differences. To eliminate the smoke spillage you may have to stoke the fire for longer than usual. Once the fire warms the chimney the draft will improve and spillage will be reduced. When operating the appliance on a lower thermostat setting, the resultant lower flue temperatures can cause your chimney system to cool down. This also decreases natural draft and spillage may occur.

General Rules for burning in the shoulder season:

- Run your appliance on **HIGH** for 30 minutes after start up and reloading before gradually turning the thermostat down to the desired heat output setting.
- The thermostat setting needs to be high enough to keep the catalytic thermometer in the active zone. If the thermometer will not stay in the active zone, turn the thermostat to a higher setting and then wait 15 minutes to confirm that the thermometer remains in the active zone. Repeat as required.
- If your appliance is producing too much heat, try to reduce the volume of wood fuel loads rather than turning your thermostat down. It is good burning practice to build smaller, hotter fires on milder days in the spring and fall.

ICE - FORMATION AND PREVENTION

Most of what you see coming from the chimney of a properly operating catalytic appliance is water vapor. In extremely cold weather, and with some exterior chimneys, this vapor may freeze in the chimney to the point of actually blocking the chimney and extinguishing the fire. In such weather, burn the appliance for 5 to 10 minutes with the thermostat set to **HIGH** to melt any possible ice build.

CATALYTIC COMBUSTOR

⚠WARNING

DO NOT OPERATE THIS APPLIANCE WITHOUT THE CATALYTIC COMBUSTOR INSTALLED. DOING SO WILL LEAD TO EXCESSIVE SMOKE AND TEMPERATURES THAT COULD RESULT IN A HOUSE FIRE CAUSING SERIOUS BODILY HARM. ONLY BURN SEASONED WOOD. FAILURE TO DO SO MAY DAMAGE THE COMBUSTOR AND WILL VOID ALL WARRANTIES.

COMBUSTOR MONITORING

It is good practice to monitor the catalytic combustor to ensure it is functioning properly. An improperly functioning combustor will result in a loss of heating efficiency and an increase in emissions and creosote buildup. The following list of items should be checked on a periodic basis:

- Combustors should be visually inspected at least three times during the heating season to determine if physical degradation has occurred. Actual removal of the combustor is not recommended unless more detailed inspection is warranted because of decreased performance. Please refer to the "***COMBUSTOR TROUBLESHOOTING***" section.
- This appliance is equipped with a catalytic thermometer to monitor combustor operation. A properly functioning combustor will maintain temperatures in excess of 500 F (indicated by the thermometer needle in the ACTIVE zone) and often reach temperatures in excess of 1000 F. If the combustor temperature falls below 500 F (thermometer needle in the INACTIVE zone), refer to the "***COMBUSTOR TESTING***" section.
- A good way to determine whether the combustor is functioning properly is by comparing the amount of smoke exiting the chimney while the combustor is engaged (bypass door closed) versus when the combustor is bypassed (bypass door open).
  Note: Open the bypass door, wait a few minutes and observe the smoke exiting the chimney, then close the bypass door again. Significantly more smoke may be seen when the exhaust is not routed through the combustor (bypass mode). Smoke may be visible shortly after lighting the fire and shortly after reloading the fire so allow the fire to stabilize before making observations.

COMBUSTOR TESTING

Follow these instructions to test the catalytic combustor:

1. Light a fire per the "***LIGHTING THE FIRE"*** instructions.
2. After burning a well established fire for 1 hour, position the thermostat knob to a medium-low burn rate setting.
3. After 5 minutes at the lower burn rate, observe the location of the thermometer needle. A properly functioning combustor will have a temperature greater than 500F with the thermometer needle in the ACTIVE zone. An improperly functioning combustor will yield thermometer reading in the INACTIVE zone.
4. Repeat step 3 for at least 3 burn cycles.
5. If the thermometer needled is still not reaching the ACTIVE zone, your combustor may require cleaning.
6. If, after cleaning the combustor and reburning, the thermometer needle is still not reaching the ACTIVE zone, your combustor may need replacing. Contact your Blaze King dealer for a replacement combustor.

Note - It is also possible that the catalytic thermometer itself may not be functioning properly. Before deeming the combustor "dysfunctional", please refer to the "***CATALYTIC THERMOMETER"*** section.

⚠WARNING

DO NOT PERFORM ANY CLEANING UNTIL THE FIRE IS OUT AND THE APPLIANCE IS COOL. HOT ASH IN A VACUUM CLEANER BAG COULD MELT THE VACUUM AND COULD RESULT IN A HOUSE FIRE CAUSING SERIOUS BODILY HARM.

COMBUSTOR CLEANING

Under certain conditions, ash particles may become attached to the face of the combustor. These particles may be seen while the combustor is glowing under fire or when the fire is out. Any deposits on the face of the combustor should be removed. There are two ways to clean the face of the combustor: (1) Brushing the combustor with a soft bristle paint brush, or (2) Passing a vacuum cleaner wand or brush near the face of the combustor. Limit cleaning to the face of the combustor (note - the flame shield will have to be removed to gain access to the face). Do not scrape the combustor with any hard tool or brush and do not run pipe cleaner through the individual cells of the combustor as this may do more harm than good. Do not remove the combustor during this process. **Note - simply burning a hot fire usually proves to be the best method of cleaning the combustor of deposits.**

COMBUSTOR REPLACEMENT

If the catalytic combustor has been deemed "dysfunctional" per the guidelines in "***COMBUSTOR TESTING***", discontinue use of the appliance until the combustor is replaced. Follow the steps below to complete the replacement **(BLAZE KING RECOMMENDS THAT YOUR DEALER OR CERTIFIED INSTALLER PERFORM THIS PROCEDURE):**

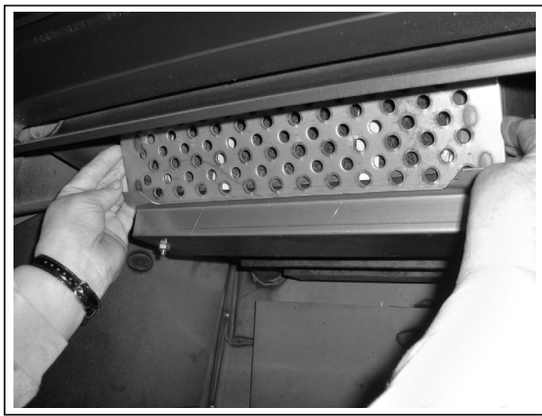

1. The appliance must be cool to touch, having gone at least 12 hours without being burned. A combustor can reach 1400F and hold temperatures for several hours, even after the fire is out. After waiting 12 hours, begin by removing the flame shield by simply lifting the shield off the two tabs at either lower corner. Pay particular attention to orientation of the flame shield in order to reinstall in the correct position.

2. Once the flame shield is removed, you will have access to the combustor. The combustor can be made of different materials such as cordierite, mulite, or stainless steel. They are all the same with regard to removal and caution should be taken so as to not drop or damage the combustor. If your combustor has never been cleaned according the manufacturers directions, you may wish to clean the combustor before replacing it with a new combustor (please refer to the "***COMBUSTOR CLEANING***" section).

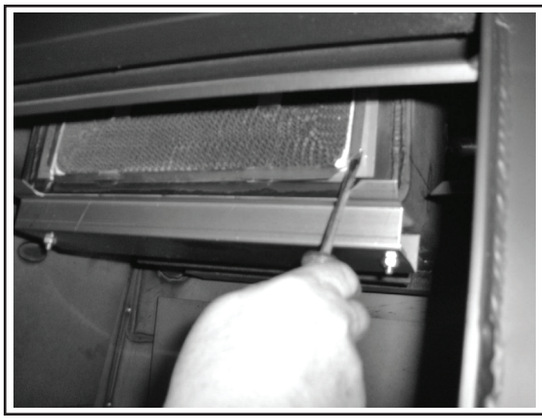

3. There are metal tabs across the bottom and on either side of the combustor. Using a flat blade screwdriver or pocket knife blade, slide the tip in between the metal tab on the left side of the combustor and the steel dome of the stove (the dome is the housing that encases the combustor). Apply slight pressure until the combustor begins to move forward. Repeat the process on the metal tab on the right side of the combustor. By working back and forth the combustor will work free of the dome housing. It is normal for the gasket that is wrapped around the combustor to fall apart during this process. New combustors are shipped with a new gasket.

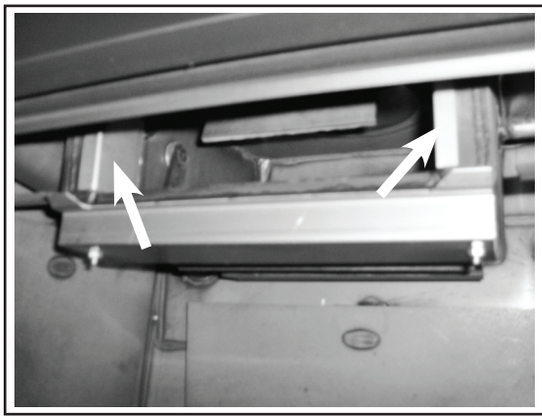

4. With the combustor removed, you will see two bypass retainers on either side of the combustor opening within the dome. These retainers are not fixed in position and can fall into the firebox upon combustor removal. Ensure that they are put back into position before replacing the combustor. Use the screwdriver or pocket knife to scrape any old gasket from the surface areas of the dome. If you intend to reuse your existing combustor, you will need to order replacement combustor gasket. It is a good idea to have this combustor gasket on hand prior to performing this procedure.

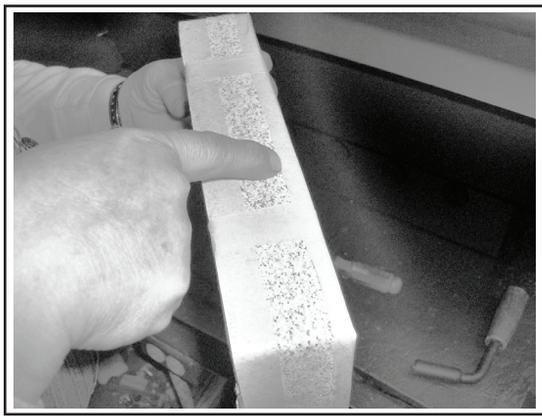

5. The new combustor will already be wrapped in gasket. Note the 1” wide masking tape - this will help to keep the leading edge of the gasket from snagging during installation. If you intend to reuse you original combustor, wrap the combustor gasket as you see here and use the 1” masking tape around the front and rear perimeter. During the first fire the masking tape will burn off and the combustor gasket will swell to provide a tight seal. This seal ensures optimal efficiency and performance. Do not burn the appliance without the combustor gasket installed.

6. Before installing, align the combustor within the opening of the dome housing. Slowly push the combustor in at the top and apply even pressure to the left and right corners. This will allow for a better view of the bottom edge for the final fitting. **DO NOT FORCE THE COMBUSTOR INTO THE OPENING. TAKE YOUR TIME AND WORK IT INTO PLACE SLOWLY.**

7. Once the combustor is fully reinserted into the opening of the dome housing, replace the flame shield. Note the flame shield sides are shaped like a triangle. The point of the triangle should face down to install correctly. Do not operate your appliance without the flame shield in place. The flame shield protects the face of the combustor against direct flame impingement and potential collisions when loading fuel.

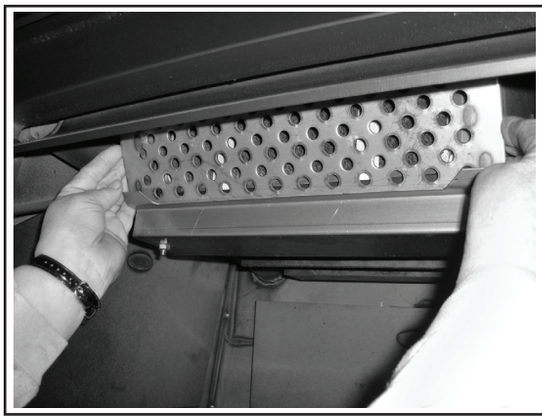

8. When correctly installed, the flame shield will rest on the two tabs located on the dome guard and will lean slightly forward. Now that the combustor and flame shield have been properly reinstalled, the appliance can be relit.

A few reminders, do not burn anything other than dry, seasoned cordwood. Burning other materials may contaminate or ruin your new combustor. Also, remember to keep your firebox door gasket seal properly adjusted (please refer to the "***LOADING DOOR TENSION ADJUSTMENT***" section). Doing so will ensure optimal performance of both the appliance and the combustor.

COMBUSTOR WARRANTY

This appliance contains a catalytic combustor, which needs periodic inspection and may require replacement for proper operation. It is against federal regulations to operate this appliance if the catalytic combustor is deactivated or removed.

The catalytic combustor supplied with this appliance is **OEM Blaze King part # S.CAT203032**.

Please consult the catalytic combustor warranty info also supplied with this appliance. Warranty claims should be addressed to:

CANADA	USA
Blaze King Industries / Valley Comfort Systems Warranty Department 1290 Commercial Way Penticton, BC, Canada V2A 3H5	Blaze King Industries Warranty Department 146 A Street Walla Walla, Washington, USA 99362

COMBUSTOR TROUBLESHOOTING

PROBLEM: CREOSOTE PLUGGING

Possible Cause: The combustor is coated with creosote burning material that produces substantial char and fly-ash.
Solution: Only burn dry, seasoned wood. Do not burn materials such as garbage, gift wrap, or cardboard.

Possible Cause: Burning wet, pitchy wood or burning large amounts of small diameter wood without the catalytic thermometer needle in the ACTIVE zone.
Solution: Burn dry, seasoned wood until temperatures are high enough to initiate catalyst light-off (indicated by the catalytic thermometer needle in the ACTIVE zone).

Possible Cause: Combustor not functioning.
Solution: If proper burning procedures have been followed and this problem persists, replace the combustor with an OEM Blaze King combustor (failure to do so will void your warranty).

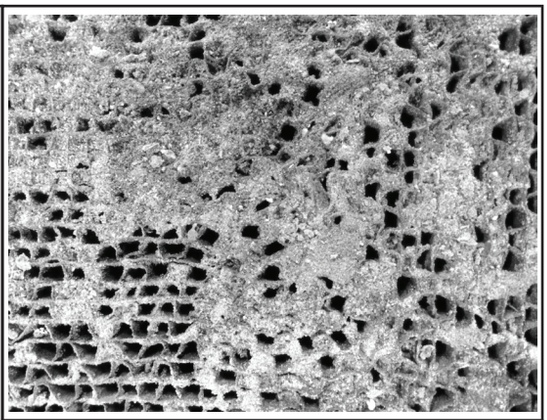

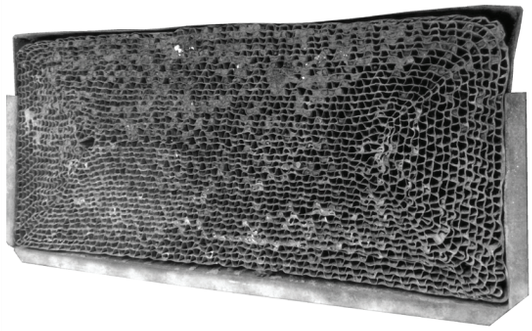

PROBLEM: COMBUSTOR PEELING

Possible Cause: Over firing and flame impingement can yield extreme temperatures (above 1800F/1000°C) at combustor surface and can cause peeling.
Solution: Avoid extreme temperatures by adjusting size of fuel loads. If peeling is severe, replace combustor.

The images to the right are examples of minor peeling (does not affect proper combustor function) and severe peeling (closed or plugged combustor that needs replacement).

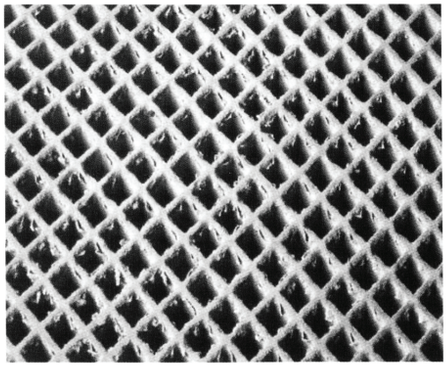

Minor Peeling

PROBLEM: CATALYTIC DEACTIVATION

Possible Cause: Burning improper fuels (ie. garbage, pressure-treated lumber, painted wood, etc.).
Solution: Burn good quality, dry, seasoned wood. If proper burning procedures have been followed and this problem persists, replace the combustor with an OEM Blaze King combustor (failure to do so will void your warranty).

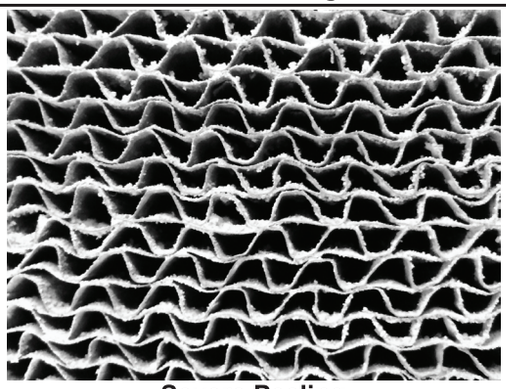

Severe Peeling

PROBLEM: COMBUSTOR MASKING

Possible Cause: The combustor is coated with a layer of fly-ash or soot from burning material that produces substantial char and fly-ash.
Solution: When the appliance is cool to touch, clean the front face of the combustor with a soft-bristled brush or vacuum lightly (refer to ***COMBUSTOR CLEANING*** for proper procedure).

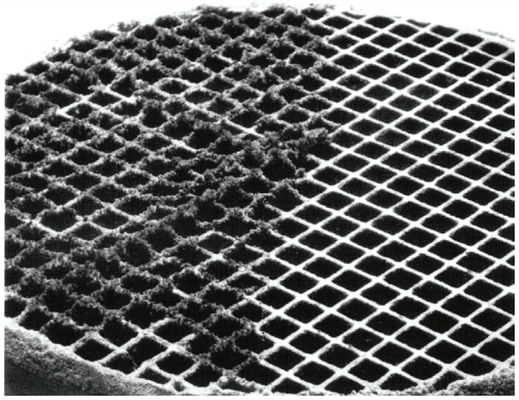

PROBLEM: THERMAL CRACKING

Possible Cause: Extreme temperature fluctuations (ie. opening loading door while the combustor is in the ACTIVE zone) can cause thermal shock which can lead to cracking.
Solution: Avoid flooding a hot, active combustor with cool room air when reloading.

If cracking causes large pieces of the combustor to separate, replace the combustor with an OEM Blaze King combustor (failure to do so will void your warranty).

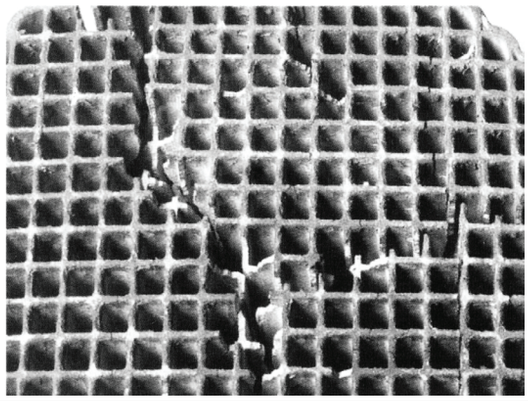

PROBLEM: MECHANICAL CRACKING

Possible Cause: Mishandling the combustor or operating the appliance without the proper gasket installed.
Solution: Handle with care. Ensure combustor is wrapped with gasket upon reinstallation.

Possible Cause: Distortion of surrounding dome housing.
Solution: The combustor should slide in and out of the dome housing with relative ease. If this is not the case, contact your dealer for further inspection.

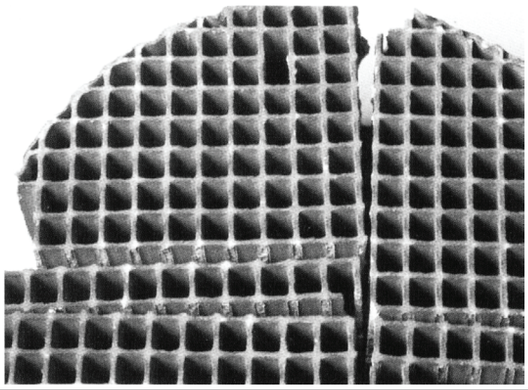

PROBLEM: COMBUSTOR CRUMBLING

Possible Cause: Excess air leaking into the firebox.
Solution: Ensure tight seal at loading door (see ***MAINTENANCE*** for instruction on gasket inspection).

Possible Cause: Excessive chimney draft.
Solution: Use a manometer to check and ensure chimney draft is within manufacturer specifications. Adjusting the appliance thermostat can help regulate chimney draft.

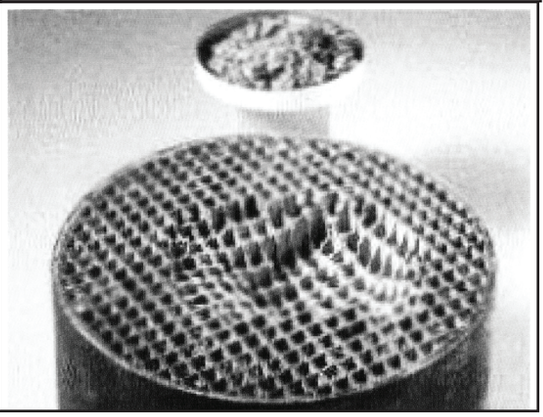

MAINTENANCE

⚠WARNING

TO PREVENT SERIOUS BURNS, DO NOT PERFORM ANY MAINTENANCE UNTIL THE APPLIANCE IS COOL. APPLIANCE SURFACES, INCLUDING THE GLASS AND ANY ATTACHED COMPONENT, WILL REMAIN HOT FOR EXTENDED PERIODS OF TIME AFTER THE FIRE HAS BEEN PUT OUT.

RECOMMENDED MAINTENANCE

It is strongly recommended to complete the following tasks on a regular basis throughout the heating season:

1. Visually inspect Catalytic Combustor and clean as required (see "***COMBUSTOR CLEANING***")
2. Clean behind internal baffles (where applicable) and inspect metal components for warping/distortion.
3. Check Catalytic Thermometer for proper calibration.
4. Check Thermostat for proper function.
5. Check Fan Assemblies for proper operation.
6. Remove all ash from firebox and ash drawer after final burn of season.
7. Check all gaskets for proper seal and adjust as required.
8. Inspect and clean the Venting System.

CATALYTIC THERMOMETER MAINTENANCE

The catalytic thermometer probe (shaft) should be cleaned regularly. Ensure the fire is out and the appliance is cool, then remove the thermometer and wipe the probe clean. While removed, confirm the thermometer indicator needle points towards the bottom of the INACTIVE zone (allow the thermometer to sit at room temperature for 10 minutes before checking). If the needle does not point towards the bottom of the INACTIVE zone, it may need adjustment. Grasp the probe with a pair of pliers then slightly loosen the bolt on the top of the dial. Turn the dial to align the needle to the bottom of the INACTIVE zone and then retighten the bolt. Once finished, reinsert the thermometer back into the appliance. **Note: If your appliance is equipped with a fan kit, turn it off and wait 10 minutes before observing the catalytic thermometer reading.**

THERMOSTAT or THERMOMETER MAINTENANCE

Any thermostat or thermometer maintenance must be completed by a certified installer. If the thermostat or thermometer malfunctions, contact your dealer for replacement.

OPTIONAL FAN ASSEMBLY MAINTENANCE

Fan assemblies should be inspected at the beginning of each burn season to ensure they are free from debris such as ash, dust, pet dander, lint, etc. The accumulation of such debris could prevent the fan blades/blower wheels from rotating freely and put excessive strain on the fan motors, ultimately leading to failure.

ASH REMOVAL

Ashes should be removed any time they come within one inch of the door opening, though it is not advisable to completely remove all of the ashes as wood burns best on a bed of ashes around 1/2" thick. When removing ashes, ensure the fire is out and the appliance is cool to touch. Ashes should be placed in a metal container with a tight fitting lid. The closed container of ashes should be placed on a noncombustible floor or on the ground (outside), well away from all combustible materials, while awaiting final disposal. If the ashes are disposed of by burial in soil or otherwise locally dispersed, they should be retained in the closed container until all cinders have thoroughly cooled. Do not place other waste in this container.

⚠WARNING

NEVER STORE HOT ASHES IN A GARAGE OR BASEMENT. HOT ASHES WILL GENERATE CARBON MONOXIDE AND / OR FLAMMABLE GASES. THESE GASES MAY CAUSE SUFFOCATION AND POSSIBLE DEATH.

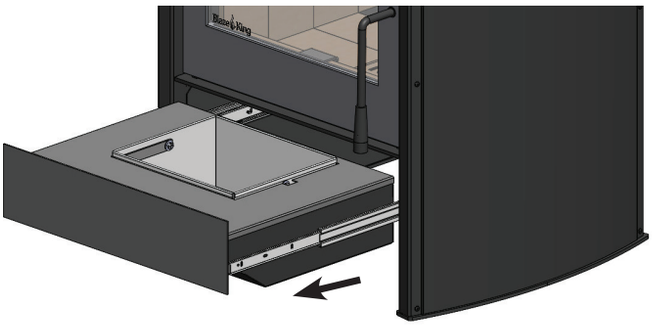

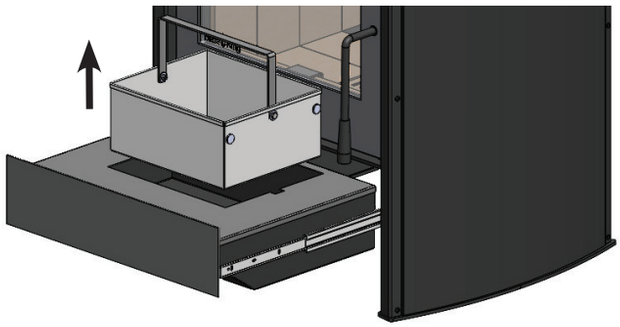

LOADING DOOR TENSION ADJUSTMENT

To tighten the loading door seal, use a 7/16 wrench to loosen latch catch bolts and move latch catch inwards. Tighten the bolts and preform a paper test (see ***"DOOR GASKET PAPER TEST")*** to ensure the proper seal was achieved.

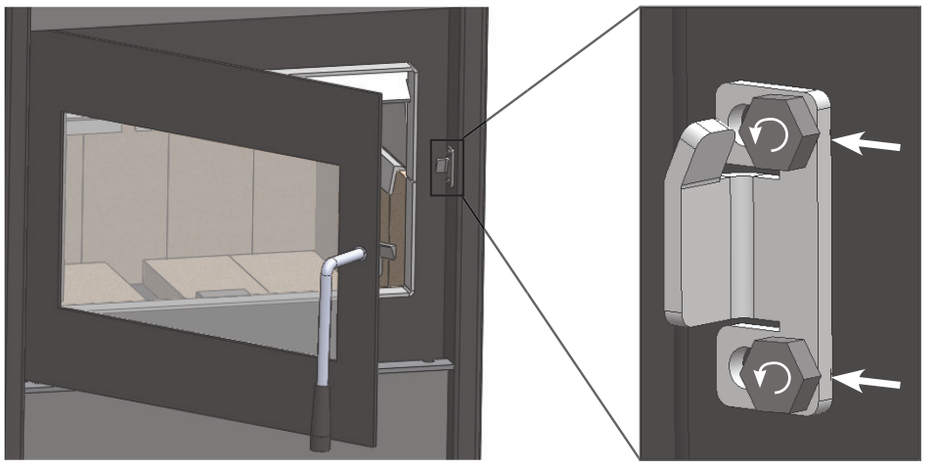

LOADING DOOR GASKET INSPECTION

Inspect the loading door gasket for physical deterioration, missing sections, or obvious leakage. The appliance door flange should make a groove in the gasket material. The side of the gasket on the inside of the groove will be dark or black while the outer side will be light or white. Dark smudges on the outer side of the gasket may indicate an air leak. If the groove in the gasket is very shallow or if there is a heavy ash or creosote deposit along the bottom edge of the gasket, it may need to be replaced. Frayed or broken gasket material, or a gasket that is hard and unyielding, will also indicate a need for replacement. Any time a piece of gasket is missing or broken the entire gasket must be replaced. A way to physically check if the gasket needs replacing is by performing a paper test (see ***"DOOR GASKET PAPER TEST")***

LOADING DOOR GASKET REPLACEMENT

If door gasket replacement is required, only replace with OEM door gasket ordered through your Blaze King dealer. This gasket will be properly sized and ready to install. **Do not stretch or cut the gasket at any time during this installation. Ensure only high temperature silicone adhesive is used for this installation (do not use household silicone caulking). Blaze King recommends that your dealer perform this task:**

1. Ensure the fire is out and the appliance is cooled to touch before removing the loading door.
2. Use a pair of pliers to pull the old door gasket out of the channel and dispose of it.
3. Clean the gasket channel of any residual adhesive to ensure the new adhesive will adhere sufficiently.
4. To ensure proper fit, dry fit the new gasket by distributing it evenly around the frame and then remove.
5. Run a small bead of a high temperature silicone adhesive along the center of the gasket channel.
6. Starting in the lower right corner, insert the new gasket into the gasket channel. Be sure to distribute the gasket evenly around the entire channel frame.
7. Allow the adhesive to dry for at least 1 hour before reinstalling and closing the loading door.
8. Confirm proper gasket installation by performing a paper test (see ***"DOOR GASKET PAPER TEST").***

⚠WARNING

DO NOT OPERATE THIS APPLIANCE IF THE DOOR GASKET IS MISSING OR DAMAGED. OVER-FIRING MAY OCCUR WHICH CAN CAUSE DAMAGE TO THE APPLIANCE OR IGNITE CREOSOTE IN THE CHIMNEY WHICH COULD LEAD TO A HOUSE FIRE CAUSING SERIOUS BODILY HARM.

DOOR GASKET PAPER TEST

Perform this test when inspecting or replacing loading door gasket:

1. Ensure the fire is out and the appliance is cooled to touch.
2. Insert a piece of paper (ie. a dollar bill) into the door opening and then latch the door shut.
3. Pull the paper out of the door while noting any obvious resistance when doing so.
4. If no resistance is felt, adjust the door tension (see "***LOADING DOOR TENSION ADJUSTMENT***").
5. Repeat this process around the perimeter of the door until consistent resistance is achieved.

DOOR GLASS GASKET INSPECTION

To inspect the door glass gasket:

1. Ensure the fire is out and the appliance is cooled to touch.
2. Hold the glass by placing the palm of each hand on either side and try to move it; If the glass moves:
   a. Inspect the glass retainers and ensure the screws holding the retainers in place are tight (hand tight plus 1/4 turn). If loose, retighten, but do not over tighten.
   b. Inspect the door glass gasket. If the gasket is frayed or missing sections, replace the gasket.

⚠WARNING

REFRAIN FROM STRIKING THE GLASS OR SLAMMING THE DOOR SHUT. DO NOT OPERATE THIS APPLIANCE IF THE DOOR GLASS OR GASKET SEAL IS BROKEN. DOING SO MAY LEAD TO A RUN AWAY FIRE WHICH COULD RESULT IN PROPERTY DAMAGE.

DOOR GLASS GASKET REPLACEMENT

If door glass gasket replacement is required, only replace with OEM door glass gasket ordered through your Blaze King dealer. The OEM gasket will be ordered to size and ready to re-install. **Do not stretch or cut the gasket at any time during this installation. Blaze King recommends that your dealer perform this task:**

1. Ensure the fire is out and the appliance is cooled to touch.
2. Remove the old glass gasket.
3. Starting at the corner opposite of the "Blaze King" logo, carefully wrap the gasket around the edges of the door glass, pressing firmly onto the sides of the glass with the gasket centered on the edge. Finish the wrapping with a 1/2" overlap. Ensure the thickness of the gasket remains consistent and uniform.
4. Reposition the glass onto the door and then install the glass retainers with original fasteners. Ensure the glass is parallel to the frame and tighten the fasteners (hand tight plus 1/4 turn).

DOOR GLASS CLEANING

The best way to keep the glass clean is to leave the appliance on high burn for a period of time after each reloading The moisture which is driven from a new load of wood contributes much of the creosote on the inside of the glass. Removing that moisture at the beginning of the burn cycle helps to keep the glass clean. Leaving the thermostat on a higher setting for 30 minutes to an hour before turning to low for an overnight burn will also help. Heavier deposits may require hand cleaning. Manual glass cleaning should be done when the appliance and glass are cool. **DO NOT CLEAN THE GLASS WHILE IT IS HOT AND DO NOT USE ABRASIVE CLEANERS TO CLEAN THE GLASS.** Use a soft cloth. After using any cleaner, thoroughly rinse the glass with water to remove any deposits left by the cleaner. Failure to remove all traces of glass cleaner will result in the glass cleaner residue baking on. This residue may be very difficult to remove.

BYPASS DOOR GASKET INSPECTION

Visually note the amount of smoke exiting the chimney while the bypass door is both OPEN and CLOSED. There should be significantly less smoke when the door is in the CLOSED position. If this is not the case, the bypass gasket may need to be replaced.

Note: This inspection could also yield a dead combustor, see "*COMBUSTOR MONITORING*".

BYPASS DOOR GASKET REPLACEMENT

If bypass door gasket replacement is required, only replace with OEM 5/8" fiber glass gasket ordered through your Blaze King dealer. The OEM gasket will be ordered to size and ready to re-install. **Do not stretch or cut the gasket at any time during this installation. Ensure only THERMOSEAL® 1000F high-temperature resistant cement is used for this installation (do not use household silicone caulking). Blaze King recommends that your dealer perform this task:**

1. Ensure the fire is out and the appliance is cooled to touch
2. Remove the flue pipe from the appliance in order to have a clear view of the bypass door **(Fig. 13)**.
3. Remove the combustor (see "*COMBUSTOR REPLACEMENT*").
4. After removing the combustor you will notice stainless bypass retainers on both the left and right sides of the combustor opening **(Fig. 14)**. They secure the bypass door in position during operation. Remove the stainless bypass retainers and set aside.
5. Working down through the flue collar, unhinge the bypass door from the bypass rod (rotating the bypass handle into a neutral position will help), then rotate the bypass door 90 degrees to remove through the combustor opening **(Fig. 15)**.
6. Remove the old gasket and clean away any residual cement from the gasket channel.
7. Apply the new high-temperature cement along the channel.
8. Place the new gasket into the channel, tapping it down to seat it securely.
9. Apply high temp anti-seize lubricant to the under side of the bypass hook **(Fig. 16)** and then reinstall the bypass door by following the previous steps in reverse order.
10. Rotate the bypass handle several times to OPEN/CLOSE the bypass door to ensure smooth and proper operation. Once satisfied, reattach the flue pipe.
11. Reinstall stainless bypass retainers into combustor opening.
12. Refer back to "*COMBUSTOR REPLACEMENT*" to reinstall the combustor. **Note: if the gasket around the combustor is damaged, it will have to be replaced.**

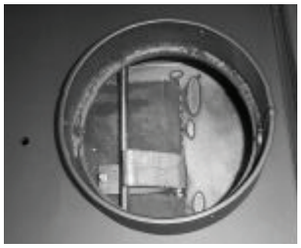

Fig. 13

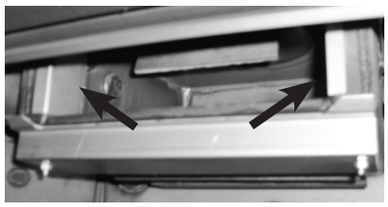

Fig. 14

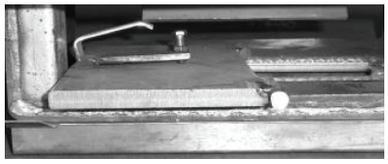

Fig. 15

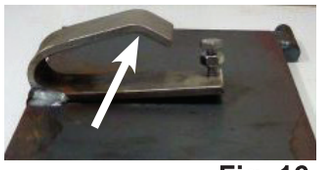

Fig. 16

VENTING SYSTEM MAINTENANCE

The entire chimney system must be cleaned and inspected regularly, especially during the coldest months of the burn season. The most efficient method to clean the chimney is to “sweep” it using a brush. Brush downwards so soot and creosote residues will come off the inner surface and fall to the bottom of the chimney where they can be removed easily. **Ensure the bypass door is OPEN prior to chimney cleaning so soot and creosote fall into the firebox.** Once cleaned, inspect the chimney for any possible damage. If damage is present, the chimney section in question must be replaced.

CREOSOTE FORMATION AND REMOVAL

When wood is burned slowly, it produces tar and other organic vapors which combine with expelled moisture to form creosote. These vapors condense in the relatively cooler chimney flue of a slow burning fire and when ignited, make an extremely hot fire. Be aware that the hotter the fire, the less creosote is deposited. The flue pipe and chimney should be inspected regularly during the heating season, until a safe frequency for cleaning is established to determine if a creosote build up has occurred. If creosote accumulation is excessive, cleaning is required. It is recommended that a professional chimney sweep does the cleaning. Both the chimney and the appliance have to be cleaned at least once a year or as often as necessary.

⚠WARNING

A CHIMNEY FIRE CAN PERMANENTLY DAMAGE YOUR VENTING SYSTEM, WHICH CAN ONLY BE REPAIRED BY REPLACING THE DAMAGED COMPONENTS. FAILURE TO REPAIR COULD LEAD TO FURTHER PROPERTY DAMAGE. DAMAGE FROM A CHIMNEY FIRE IS NOT COVERED BY THE LIMITED WARRANTY.

RUN-AWAY OR CHIMNEY FIRE

CAUSES:

1. Using incorrect fuel or small fuel pieces which would normally be used as kindling.
2. Leaving the door ajar too long and creating extreme temperatures as the air rushes in the open door.
3. Improperly installed or worn gaskets.
4. Creosote build up in the chimney.
5. Leaving the bypass door open too long.

SOLUTIONS:

1. Do not burn treated or processed wood, coal, charcoal, colored paper, or cardboard.
2. Be careful not to over fire the appliance by leaving the door open too long after the initial start-up.
3. Replace worn, dried out (inflexible) gaskets.
4. Have your chimney cleaned regularly.

WHAT TO DO IF A RUN-AWAY OR CHIMNEY FIRE STARTS:

1. Close the thermostat by rotating the knob fully counter clockwise and ensure the firebox door and the bypass door are closed.
2. Call the local fire department.
3. Examine the chimney, attic, and roof of the house to see if any part has become hot enough to catch fire. If necessary, hose area down with a fire extinguisher or water from a garden hose.
4. Do not operate the appliance again until you are certain the chimney has not been damaged

IT IS ADVISED TO HAVE A WELL UNDERSTOOD PLAN OF ACTION IN THE EVENT OF A CHIMNEY FIRE

TROUBLESHOOTING

Your Blaze King is designed to allow a wide selection of heat output levels. If you begin to lose control of the amount of heat the stove is emitting, determine the cause early so that major problems may be avoided.
The six major needs of a well-controlled fire are:

1. Knowledgeable operator.
2. Adequate air supply.
3. Firewood of good quality and proper size.
4. Catalytic combustor in good condition.
5. Clean chimney, properly sized and installed.
6. Door gasket tight and firm.

Considering all of the above, number one is the most important for safe and efficient operation of any wood stove. Please study the operation instructions carefully. Consult your BLAZE KING dealer if you have any questions not answered in this manual.

All of the six above mentioned needs are interrelated. A deficiency in any one will affect all of the others. If you encounter a problem, determine the source of the problem and then follow-up by checking the other needs as possible contributing factors.

PROBLEM: Chimney Fire	
CAUSE Act immediately regardless of cause	**SOLUTION** Turn the thermostat to lowest setting, make sure the loading door and the bypass door are tightly closed. **Call Fire Department.**
After the fire is out, have your chimney and flue connector inspected by a certified chimney sweep. A damaged masonry chimney should be repaired or rebuilt. A prefabricated chimney (factory built) that is damaged should be replaced. Any damage to the flue connector should be corrected before the system is used again. Possible causes of a chimney fire, and remedies for those causes, can be found further in this section: “Excessive Creosote Formation”, and “Spots of Creosote Accumulation in Chimney or Flue Pipe”.	

PROBLEM: Not enough heat.	
CAUSE Green or wet wood. Not enough fuel in stove.	**SOLUTION** Use a moisture meter to ensure you are burning seasoned wood. Don’t be afraid to FULLY load the stove. A FULL load of wood won’t burn any hotter than the thermostat is set.
Obstruction in chimney or cap screen. Combustor plugged or coated.	Remove obstruction. See “COMBUSTOR, TESTING” See “COMBUSTOR, CLEANING”
Combustor not functioning.	See “COMBUSTOR, TESTING”. If needed, replace combustor, See”“COMBUSTOR, REPLACING”.
Thermostat set too low.	Raise thermostat setting.
Thermostat not operating properly.	Consult your Blaze King dealer.
Poor draft caused by a poorly designed chimney system.	Measure draft with Manometer. See “CHIMNEY DRAFTS” Consult your Blaze King dealer or a chimney sweep.
Strong, gusting winds causing downdraft in chimney	Install wind-resistant chimney cap. Directional caps may not stay freely rotating. If you have a directional cap, check it frequently.
Tightly sealed house, inadequate air supply.	Slightly open a window, near the stove or install an outside air kit.
Reloading too much wood on top of too few coals.	Allow a larger bed of coals to build up.

TROUBLESHOOTING

PROBLEM: Too much heat.	
CAUSE Bypass door left open.	**SOLUTION** Close the bypass door.
Thermostat set too high.	Lower thermostat setting.
Loading door gasket leaking, admitting excess air into firebox.	Replace door gasket and/or adjust door. See “GASKET INSPECTION”
Excessive draft in the chimney.	Measure draft with a Manometer. See “DRAFTS”. Consult your Blaze King dealer or a chimney sweep. Install a cap.
Thermostat not operating properly.	Consult your Blaze King dealer.
Wood is too small.	Use larger pieces.

PROBLEM: One or both fans will not run, or there is no adjustment for fan speed.	
CAUSE Fans mounted improperly.	**SOLUTION** Check that fan blade’s not touch edges of hole.
Fan speed control.	Consult your Blaze King dealer for replacement.

PROBLEM: Fans minimum speed too fast or maximum speed too slow.	
CAUSE Fan speed control out of adjustment.	**SOLUTION** Consult your Blaze King Dealer.

PROBLEM: Excessive creosote formation in chimney and chimney Connector.	
CAUSE Bypass door left open.	**SOLUTION** Close bypass door.
Bypass door not sealing tightly.	Inspect bypass door and seal for warping. Ash or creosote buildup may occur on door or seat. With stove cold scrape and vacuum area around bypass. Be sure all mating steel surfaces are clean and smooth.
Improper operation.	Check thermostat setting and operating procedures. See “THERMOSTAT & OPTIMAL THERMOSTAT SETTING”
Wood too green or wet.	Use seasoned wood. Use a moisture meter to confirm.
Catalytic combustor not operating properly.	Inspect the combustor. See “CATALYTIC COMBUSTOR, TESTING”
Poor draft caused by a poorly designed chimney system.	Measure draft with Manometer. See “DRAFTS”. Consult your Blaze King dealer or a chimney sweep.
Chimney too cold or poorly insulated.	Upgrade chimney system. Consult your Blaze King dealer or a chimney sweep.

PROBLEM: Catalytic Thermometer (on top of stove) does not go into "Active" zone, or does not stay there for long. (Fans must be in “off” position for 10 minutes prior to checking)	
CAUSE Improper operation.	**SOLUTION** Check thermostat setting and operating procedures. See “THERMOSTAT & OPTIMAL THERMOSTAT SETTING”
Obstruction in chimney or cap.	Clean chimney, remove obstructions.
Faulty catalytic thermometer.	Check catalytic thermometer calibration.
Wood too green or wet.	Use seasoned wood.

Combustor plugged or coated.	Clean combustor. See “CATALYTIC COMBUSTOR TESTING”
Combustor not functioning.	Check and test combustor. If needed replace combustor. See “CATALYTIC COMBUSTOR, REPLACING”
Thermostat not operating properly.	Consult your blaze King Dealer.
Bypass door leaking or not closing completely.	Inspect and clean area around bypass doors. Adjust or replace gasket if necessary. Consult your Blaze King Dealer.

PROBLEM: Spots of creosote accumulation in flue pipe or chimney.	
CAUSE Air leaks in flue pipe or chimney.	**SOLUTION** Inspect flue pipe and chimney. Repair or replace as necessary. Check to be sure that the flue pipe is installed correctly.
CAUTION: a leaking chimney system is a fire hazard and demands immediate attention.	
Poor draft caused by an oversize flue, single wall pipe, to many elbows, etc.	Measure draft with Manometer. See “DRAFTS”. Consult your Blaze King dealer or a chimney sweep.

PROBLEM: Door glass quickly becomes coated with creosote.	
CAUSE Low thermostat setting or lowering the thermostat setting too far, too quickly.	**SOLUTION** Turn the thermostat to the warmest setting during the first 20-30 minutes or until the fire is well established after each reloading.
Poor draft caused by an oversize or short flue, etc.	Measure draft with Manometer. See “DRAFTS”. Consult your Blaze King dealer or a chimney sweep.
Obstruction in chimney or cap screen.	Remove obstruction. Clean chimney and/or cap screen.
Strong, gusting winds causing downdraft in chimney.	Install wind-resistant chimney cap.
Tightly sealed house, inadequate air supply.	Open a window, slightly, near the stove. Install a Fresh Air Kit.
Burning poorly seasoned wet wood, or wood with high pitch content.	Use seasoned wood with low pitch content, such as some types of pine.

PROBLEM: The combustor temperature cannot be controlled. Turning the thermostat down often makes the combustor temperature go up.
CAUSE Turning the thermostat down, particularly in the first half of the burn cycle, causes the fire to emit more smoke, which is fuel for the combustor. The combustor temperature therefore climbs for up to several hours. This is normal, and is of no concern. As long as only the combustor temperature is elevated, there is nothing to worry about.

PROBLEM: Smoke spills from door opening when loading fuel	
CAUSE Spark arrestor screen on cap plugged.	**SOLUTION** Clean spark arrestor screen to bare metal wire.
Chimney too cold.	Make certain double wall stove pipe is used in installation.
Not enough vertical rise.	Make certain a minimum vertical rise of 36” is observed prior to elbows. Use two 45 elbows instead of 90 elbow.
Chimney not drafting.	Turn thermostat to highest setting, open bypass, leave loading door closed and wait 5-10 minutes to increase chimney or flue temperature.

REPLACEMENT PARTS

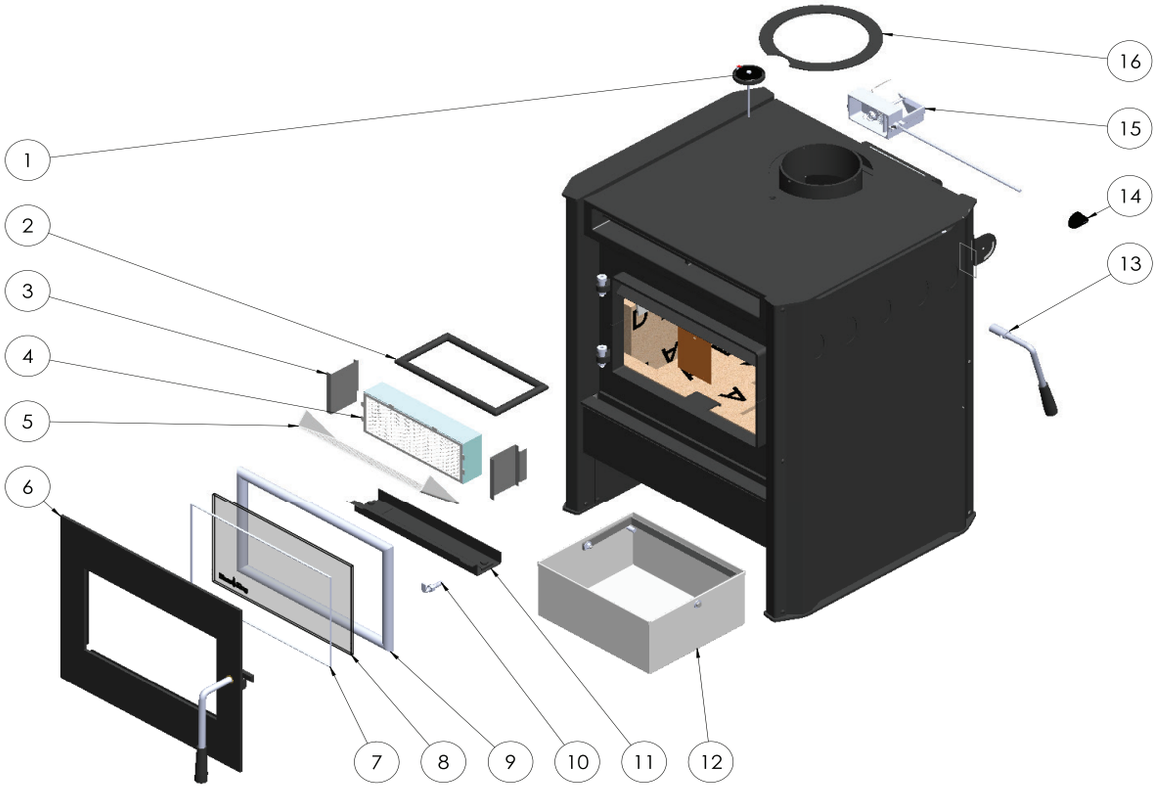

No. exploded view	Part #	Description	QTY
1	120-0342-E	CATALYTIC THERMOMETER	1
2	S.155.0255.B.3	BYPASS GASKET - 3 ft	1
3	S.Z4819	BYPASS RETAINER KIT	1
4	S.CAT203032	COMBUSTOR ASSEMBLY	1
5	S.Z2430	FLAME SHIELD	1
6	S.Z2486	DOOR ASSEMBLY	1
7	S.155.0254.6	DOOR GLASS GASKET - 5 ft	1
8	130-0243	GLASS CERAMIC 5MM	1
9	S.155.0186.6	DOOR GASKET - 6 ft	1
10	S.2449	LATCH CATCH	1
11	S.Z4551	DOME GUARD REPLACEMENT KIT	1
12	S.Z2433	ASH BUCKET	1
13	S.Z2452.M	BYPASS HANDLE	1
14	220-0102	THERMOSTAT KNOB	1
15	S.Z3009	THERMOSTAT ASSEMBLY	1
16	S.Z3849	FLUE RING	1

Brick Layout

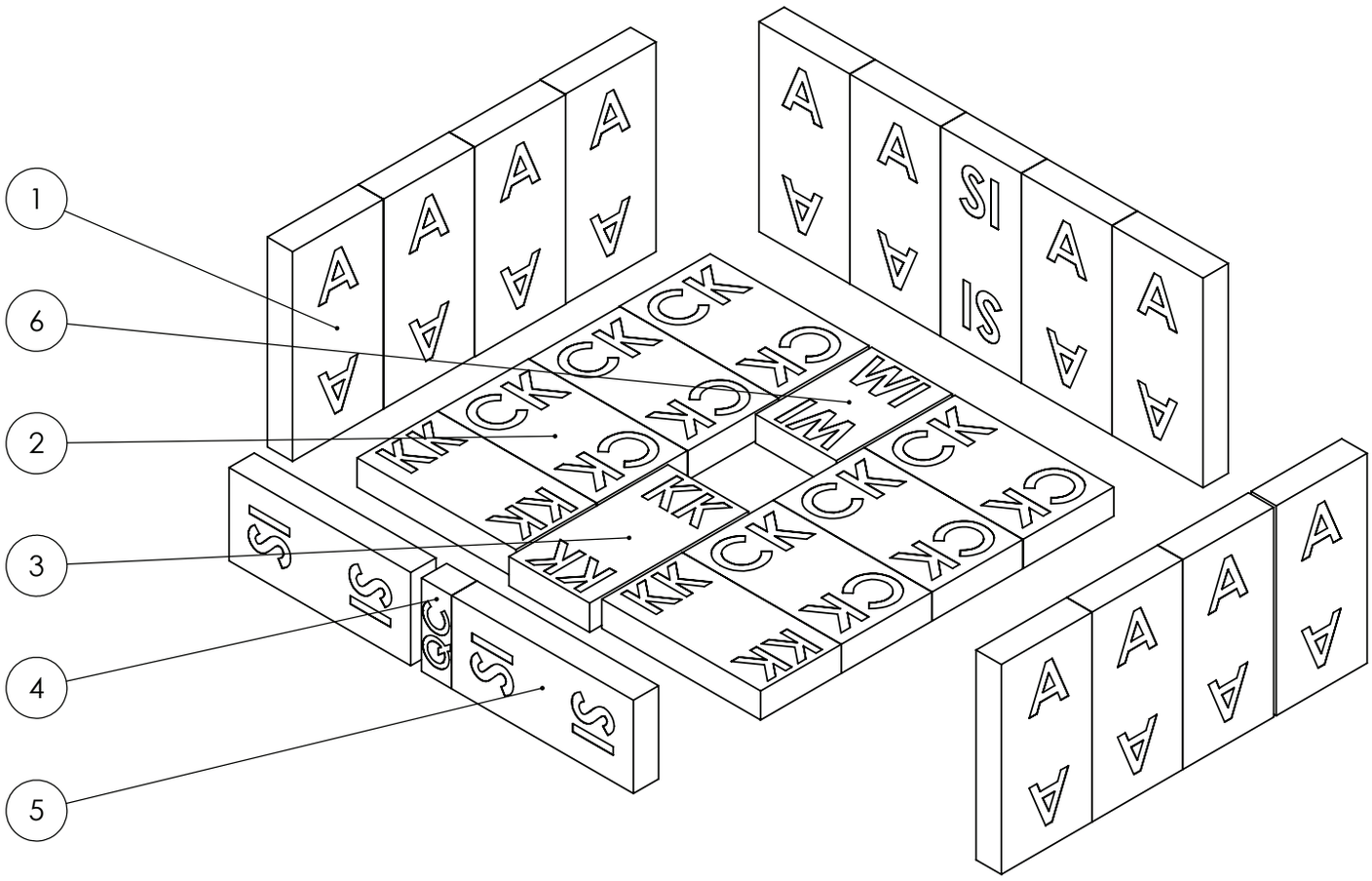

ITEM NO.	PART NUMBER	QTY.
1	A Size Brick	12
2	CK Size Brick	6
3	KK Size Brick	3
4	QC Size Brick	1
5	SI Size Brick	3
6	WI Size Brick	1

S.Z1714 Fan Kit

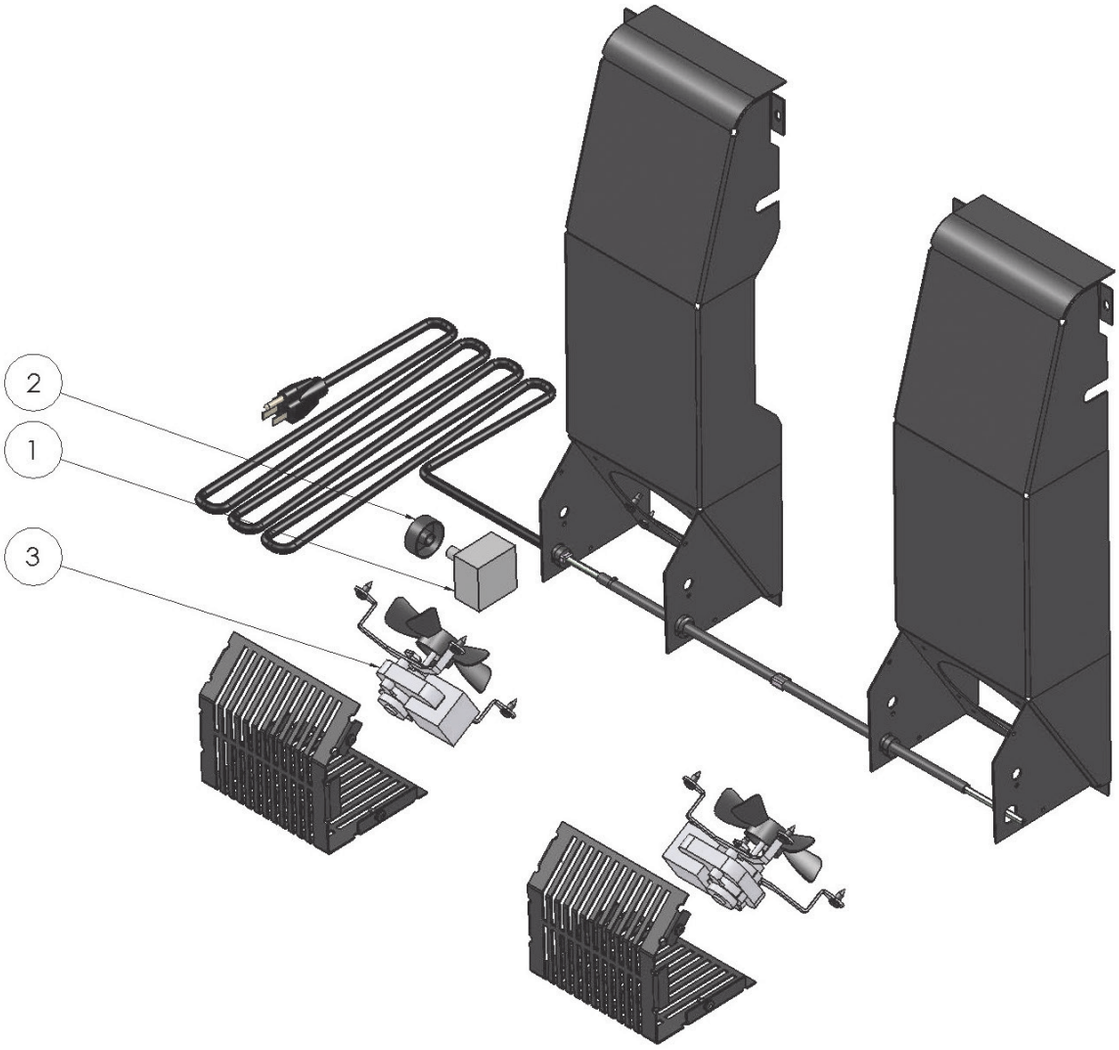

No. exploded view	Part #	Description	QTY
1	145-0136	RHEOSTAT WITH OFF (O/H/LOW)	1
2	220-0137	RHEOSTAT KNOB BLACK SILVER LINE	1
3	150-0175-C	FAN AXIAL SPIDER MOUNT	1

WARRANTY

BLAZE KING WOOD LIMITED WARRANTY

Blaze King and Valley Comfort's respective brands extend the following warranty for wood fired appliances purchased from an authorized Blaze King / Valley Comfort dealer and installed in the United States of America or Canada. Warranty starts with date of purchase by the original owner (End User) except as noted for replacement parts.

Warranty Period		Components Covered	
Parts	Labor	Wood	
1 Year		X	All parts, materials and surface finishes (flaking and peeling) Subject to Conditions, Exclusion, and Limitations listed.
2 Years		X	Fan assemblies and motors, thermal sensors, catalytic thermometer, bi-metallic thermostat assembly, door handle metal components.
5 Years	2 Years	X	Firebox & Heat Exchanger, Bypass Door Steel Components
6 Years		X	Catalyst Combustor (see Conditions, Exclusions, and Limitations)
1 Year		X	Other Replacement Parts
SEE CONDITIONS, EXCLUSIONS, AND LIMITATIONS.			

Blaze King Wood Limited 5 Year Warranty

Blaze King is the manufacturer of the Blaze King line of heating products. At Blaze King, our commitment to the highest level of quality and customer service is the most important thing we do. Each Blaze King stove is built on a tradition of using only the finest materials and is backed by our limited warranty to the original purchaser. With Blaze King, you're not just buying a stove; you're buying a company with years of unequalled performance and quality.

Limited Six (6) Year Warranty:
The CATALYTIC COMBUSTOR is under warranty by Blaze King for six (6) years from the date of original retail purchase. The purchaser shall pay the following share of the then current retail price for the combustor: The first three (3) years no charge, 4th year 60%; 5th year 70%, 6th year 80%. The Combustor must be returned to your dealer along with a completed COMBUSTOR FAILURE REPORT and original proof of purchase document.

Limited (5) Year Warranty:
Under this warranty, Blaze King covers the stove body and accessories against defects in materials and workmanship, for part repair or replacement for the first five (5) years *** to the original purchaser. This Warranty covers: All Steel firebox components against defects in material and workmanship. Please see the exclusions and limitation section below as certain restrictions and exclusions apply this warranty.

Limited Two (2) Year Warranty:
Under this warranty, Blaze King covers, fan assemblies , modular thermostat and door handle steel components against defects in materials and workmanship, for part repair or replacement and limited labor for the first two (2) years to the original purchaser. Please see the exclusions and limitation section below as certain restrictions and exclusions apply to this warranty.

Limited One (1) Year Warranty:
Under this warranty, Blaze King covers all parts and materials against defects in materials and workmanship including exterior paint finishes, for part repair or replacement and limited labor for the first year to the original purchaser. Please see the exclusions and limitation section below as certain restrictions and exclusions apply to this warranty.

How the Warranty Works

1. All warranties by the manufacturer are set herein and no claim shall be made against the manufacturer on any oral warranty or representation. All claims under this Limited Warranty must be made in writing by your dealer.
2. Any stove or part thereof that is repaired or replaced during the Limited Warranty period will be warranted under the terms of the Limited Warranty for a period not exceeding the remaining term of the original Limited Warranty or six (6) months, whichever is longer.
3. For any part or parts of this stove, which in our judgment show evidence of defects, Blaze King reserves the option to repair or to replace the defective part(s) through an accredited distributor or agent, provided the defective part is returned to the distributor or agent, transportation prepaid, if requested.
4. If you discover a problem that you think may be covered by the Limited Warranty, you MUST REPORT it to your Blaze King dealer WITHIN 30 DAYS from the date the problem was first detected, giving them proof of purchase and the date of purchase. The dealer will investigate the problem and work with Blaze King to determine whether the problem:
   a) Is covered by the Limited Warranty or
   b) Can be fixed in your home or does the product need to be returned to Blaze King for repair.
5. If Blaze King determines that the stove needs to be returned to Blaze King for repair, the customer has the responsibility and the expense of removing it from their home and shipping it to Blaze King. If the problem is covered by the Warranty, Blaze King will repair or replace the item at their discretion and the customer will be responsible for return shipping and re-installation in their home.
6. If the problem is not covered by the Limited Warranty, the customer will be responsible for all repair costs, as well as all storage, shipping and the cost of removing and re-installing the stove.
   If you are not satisfied with the service provided by the Blaze King dealer, write to Blaze King at the address listed on the first page of the Owner's Manual. Include a copy of the original purchase invoice and a description of the problem.

Exclusions and Limitations:

1. This Warranty does not cover tarnish, discoloration or wear on the plated surfaces Painted finishes will change color after initial firing and will continue to change through the lifetime of the stove. This is normal occurrence for all high temperature coatings.
2. This Warranty does not cover gasket material or firebrick.
3. Blaze King strongly recommends installation by a certified installer. Failure to comply may adversely affect coverage under the terms of this warranty. This Limited Warranty covers defects in materials and workmanship only if the product has been installed in accordance with local building and fire codes; in their absence refer to the owner's manual. If the product is damaged or broken as a result of any alteration, wilful abuse, mishandling, accident, neglect, or misuse of the product, the Limited Warranty does not apply.
4. The stove must be operated and maintained at all times in accordance with the instructions in the Owner's Manual. If the unit shows signs of neglect or misuse, it is not covered under the terms of this Warranty policy. Performance problems due to operator error will not be covered by the Limited Warranty policy.
   Some minor expansion, contraction, or movement of certain parts and resulting noise, is normal and not a defect and, therefore, is not covered under this Limited Warranty.
5. Misuse includes over-firing. Over-firing can be identified later by warped plates and paint pigment being burnt off. Over-firing this appliance can cause serious damage and will nullify the Limited Warranty.
6. The Limited Warranty will cover glass thermal breakage only and will not cover misuse of the stove glass, including but not limited to:
   a) Glass that is struck, has surface contaminates or has had harsh or abrasive cleaners used on it.
   b) If the door is slammed or is closed while wood in the firebox is protruding out the stove opening thus striking the glass.
7. This warranty does not cover products made or provided by other manufacturers and used in conjunction with the operation of this stove without prior authorization from Blaze King The use of such products may nullify the Limited Warranty on this stove. If unsure as to the extent of this Limited Warranty, contact your authorized Blaze King dealer before installation.
8. Blaze King will not be responsible for inadequate performance caused by environmental conditions.
9. The Limited Warranty does not cover installation and operational related problems such as use of downdrafts or spillage caused by environmental conditions. Environmental conditions include but are not limited to nearby trees, buildings, roof tops, wind, hills, mountains, inadequate venting or ventilation, excessive offsets, negative air pressures or other influences caused by mechanical systems such as furnaces, fans, clothes dryers etc.
10. The Limited Warranty does not cover damage caused by burning salt-saturated wood, corrosive driftwood, chemically treated wood or any fuel not recommended in the Owner's Manual (use cord wood only).
11. The Limited Warranty is void if:
    a) The stove has been operated in atmospheres contaminated by chlorine, fluorine or other damaging chemicals.
    b) The stove is subject to submersion in water or prolonged periods of dampness or condensation.
    c) Any damage to the unit, combustion chamber or other components due to water, or weather damage which is the result of, but not limited to, improper chimney/venting installation.
    d) Salt air in coastal areas or high humidity can be corrosive to the finish; these environmental conditions can cause rusting. Damage caused by salt air or high humidity is not covered by the Limited Warranty.
12. Exclusions to the Limited Warranty include: injury, loss of use, damage, failure to function due to accident, negligence, misuse, improper installation, alteration or adjustment of the manufacturer's settings of components, lack of proper and regular maintenance, alteration, or act of God.
13. The Limited Warranty does not cover damage caused to the stove while in transit. If this occurs, do not operate the stove and contact your courier and/or dealer.
14. The Limited Warranty does not extend to or include paint, door or glass gaskets or firebricks damage caused by normal wear and tear, such as paint discoloration or chipping, worn or torn gaskets, chipped or cracked firebrick, etc.
15. The Limited Warranty does not include damage to the unit caused by abuse, improper installation, or modification of the unit.
16. Damage to plated surfaces caused by fingerprints, scratches, melted items, or other external scores and residues left on the plated surfaces from the use of abrasive cleaners or polishes is not covered in this warranty.

17. Blaze King is free of liability for any damages caused by the stove, as well as inconvenience expenses and materials. The Limited Warranty does not cover incidental or consequential damages.
18. The Limited Warranty does not cover any loss or damage incurred by the use or removal of any component or apparatus to or from the Blaze King stove without the express written permission of Blaze King and bearing a Blaze King label of approval.
19. Any statement or representation of Blaze King Products and their performance contained in Blaze King advertising, packaging literature, or printed material is not part of the Limited Warranty.
20. The Limited Warranty is automatically voided if the stove's serial number has been removed or altered in any way. If the stove is used for commercial purposes, it is excluded from the Limited Warranty.
21. No dealer, distributor, or similar person has the authority to represent or warrant Blaze King Products beyond the terms contained within the Limited Warranty. Blaze King assumes no liability for such warranties or representations.
22. Blaze King will not cover the cost of the removal or re-installation of the stove, hearth, facing, mantels, venting or other components.
23. Labor to replace or repair items under this Limited Warranty will be covered per our warranty service fee reimbursement and labor rates are set per component schedule. Labor rates vary from location to location and as such total labor costs may not be covered. Please consult with your dealer or service technician for any additional charges such as travel time or additional labor charges that may apply.
24. For parts of the Blaze King wood stove or fireplace insert warranted beyond the first year, the five year limited warranty will have the same obligations as described in this document, provided, however that the purchaser shall pay the following percentage of the then current retail cost of the repair or the replacement, according to the year after purchase in the which the defect is brought to the attention of Blaze King.*** During the 2nd year----purchaser pays 20%. 3rd year ----purchaser pays 40%. 4th year -----purchaser pays 60%. 5th year---- purchaser pays 80%.
25. If a defect or problem is determined by Blaze King to be non warrantable, Blaze King is not liable for travel costs for service work. In the event of in-home repair work, the customer will pay any in-home travel fees or service charges required by the Authorized Dealer.
26. At no time will Blaze King be liable for any consequential damages which exceed the purchase price of the unit. Blaze King has no obligation to enhance or modify any stove once manufactured (example: as a stove model evolves, field modifications or upgrades will not be performed).
27. This Limited Warranty is applicable only to the original purchaser and it is nontransferable.
28. This warranty only covers Blaze King Products that are purchased through an authorized Blaze King dealer.
29. If for any reason any section of the Limited Warranty is declared invalid, the balance of the warranty remains in effect and all other clauses shall remain in effect.
30. The Limited Warranty is the only warranty supplied by Blaze King, the manufacturer of the stove. All other warranties, whether express or implied, are hereby expressly disclaimed and the purchaser's recourse is expressly limited to the Limited Warranty.
31. Blaze King and its employees or representatives will not assume any liability for damages, either directly or indirectly, caused by improper usage, operation, installation, servicing or maintenance of this stove.
32. Blaze King reserves the right to make changes without notice. Please complete and mail the warranty registration card and have the installer fill in the installation data sheet in the back of the manual for warranty and future reference.
33. Blaze King is responsible for stocking parts for a maximum of seven (7) years after discontinuing the manufacture or incorporation of the item into its products. An exception to this would be if an OEM supplier is not able to supply a part.

INSTALLER NOTES

Installer - Please complete the following information:

Dealer Name & Address:_____

_____

Installer Name (print): _____

Installer Signature: _____

Installer Phone #: _____

Date Installed:_____

Appliance Serial No.: _____